Redefine your comfort zone. ™ | www.titus-hvac.com

Titus
Redefine your comfort zone.™

chilled beams

open ceiling | k-12 education | wood grains | dual-function | energy solutions

u

Table of Contents

CHILLED BEAM PRODUCTS

Chilled Beam Products U3
Overview U5

ACTIVE CHILLED BEAMS

CBAL2 ..... U6
CBAL2 Dimensions U8
CBAL2 Performance Data U11
CBE2-24 / CBE2-12 ..... U16
Dimensions U18
Performance Data U21
CBLV-12 ..... U30
CBLV-12 Dimensions U32
CBLV-12 Performance Data U34
CBAM U39
CBAM Dimensions U41
CBAM Performance Data U42
CBAV U45
Dimensions U46
Performance Data U47
CBAS U52
Dimensions U54
Performance Data U55
CBAB U60
Dimensions U62
Performance Data U63
CBAW U68
Dimensions U69
Performance Data U70

PASSIVE CHILLED BEAMS

CBPE U75
CBPE Dimensions U76
Performance Data U77

ICONS

Icons Key U79

active chilled beams

PAGES: U6-U70

CBAL2

LINEAR ACTIVE CHILLED BEAM

- Active linear chilled beam with 1-way or 2-way air distribution patterns
- Optimized nozzle design provides high capacity and low noise levels
- Linear design matching commercial architectural styling
- Designed to fit in standard 24-inch ceiling systems
- Optimized diffuser geometry maximizes occupant comfort

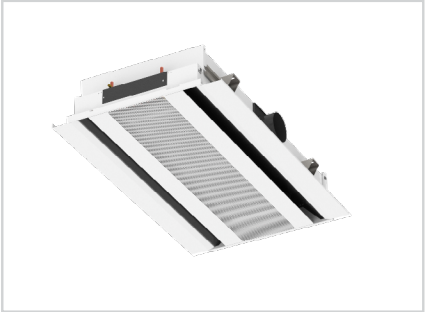

CBE2

LINEAR EXPOSED ACTIVE CHILLED BEAM

- Exposed linear chilled beam with 1-way or 2-way air distribution patterns
- Optimized nozzle design provides high capacity and low noise levels
- Linear design matching commercial architectural styling
- Integral coanda plates for ceiling independent operation
- Optimized diffuser geometry maximizes occupant comfort

CBLV-12

LINEAR BEAM WITH VERTICAL COILS

- Active linear chilled beam with 1-way or 2-way air distribution pattern
- Optimized nozzle design provides high capacity and low noise levels
- Linear design matching commercial architectural styling
- Designed to fit in standard 12-inch ceiling systems
- Vertical coil configuration
- Optimized diffuser geometry maximizes occupant comfort

CBAM

MODULAR ACTIVE CHILLED BEAM

- Active modular chilled beam with 4-way air distribution pattern
- Optimized nozzle design provides high capacity and low noise levels
- Modular design matching commercial architectural styling
- Designed to fit in standard 24-inch ceiling systems
- Optimized diffuser geometry maximizes occupant comfort

CBAV

VERTICAL RECESSED ACTIVE CHILLED BEAM

- Active chilled beam for use in recessed applications
- Optimized nozzle design provides high capacity and low noise levels
- Vertical coil with condensate pan
- Designed to integrate with Titus slot diffusers
- Optimized diffuser geometry maximizes occupant comfort

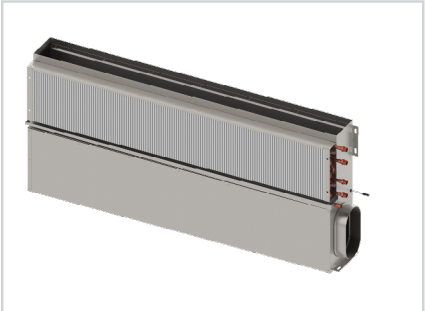

CBAS

SILL MOUNTED CHILLED BEAM

- Provides comfortable, effective sensible cooling to the space
- Optimized nozzle design provides high capacity and low noise levels
- Ideal for induction unit and unit ventilator retrofit projects
- Quick and simple installation
- Available in nominal lengths up to 6 feet
- ½" Sweat or ½" MNPT coil connections

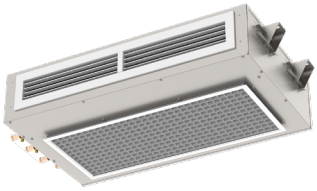

CBAB

CONCEALED BULKHEAD ACTIVE CHILLED BEAM

- Provides comfortable, effective sensible cooling to the space
- Optimized nozzle design provides high capacity and low noise levels
- Ideal for single room hospitality spaces
- Quick and simple installation
- Available in nominal lengths up to 6 feet
- ½" Sweat or ½" MNPT coil connections

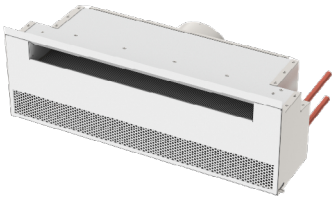

CBAW

SIDEWALL ACTIVE CHILLED BEAM

- Provides comfortable, effective sensible cooling to the space
- Optimized nozzle design provides high capacity and low noise levels
- Ideal for multi-story residential and hospitality spaces
- Quick and simple installation
- Available in nominal lengths up to 6 feet
- ½" Sweat or ½" MNPT coil connections

PAGES: U75-U77

passive chilled beams

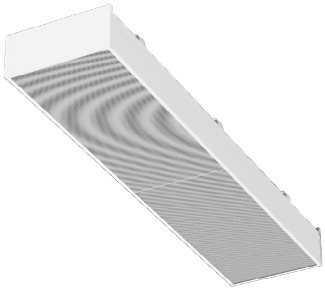

CBPE

EXPOSED PASSIVE CHILLED BEAM

- Provides comfortable, effective sensible cooling to the space
- Ultra quiet, natural convection driven operation
- Perforated face
- Exposed or concealed installation

Overview

The Titus chilled ceiling product line is comprised of chilled beams, both active and passive beams, and floor mounted displacement chilled beams. These products offer optimized performance and provide high levels of thermal comfort for the occupant. In addition to increased occupancy comfort, use of the chilled ceiling products reduce the amount of energy required to heat and cool a building.

The chilled ceiling products provide sensible cooling and heating to the space by utilizing the more efficient heat transfer capacity of water, as opposed to air. This decouples the latent and sensible loads, reducing the energy cost of sensible cooling. With passive beams and radiant products, an additional system is necessary to meet the ventilation and latent cooling needs of the space. The Titus active chilled beams integrate the supply of ventilation air creating an active diffuser. Using the ventilation air to pressurize a plenum with aerodynamically designed nozzles, high velocity jets of air are created forcing induction of room air over the water coils integral to the units. Forced induction dramatically improves the heating and cooling capacity over passive beams and radiant products. Titus active chilled beams harness the energy of the supply air to further reduce total energy consumption.

Titus offers a chilled ceiling product to meet the requirements of any design or installation. CBPE models of passive beam accommodate both exposed and recessed mounting applications. Active chilled beams are available in 1, 2, and 4-way throw patterns. There is even a model for high sidewall applications. In addition to the variety of product solutions available, the appearance of the units can be customized through standard options, which enables seamless integration into any architectural style, traditional or contemporary.

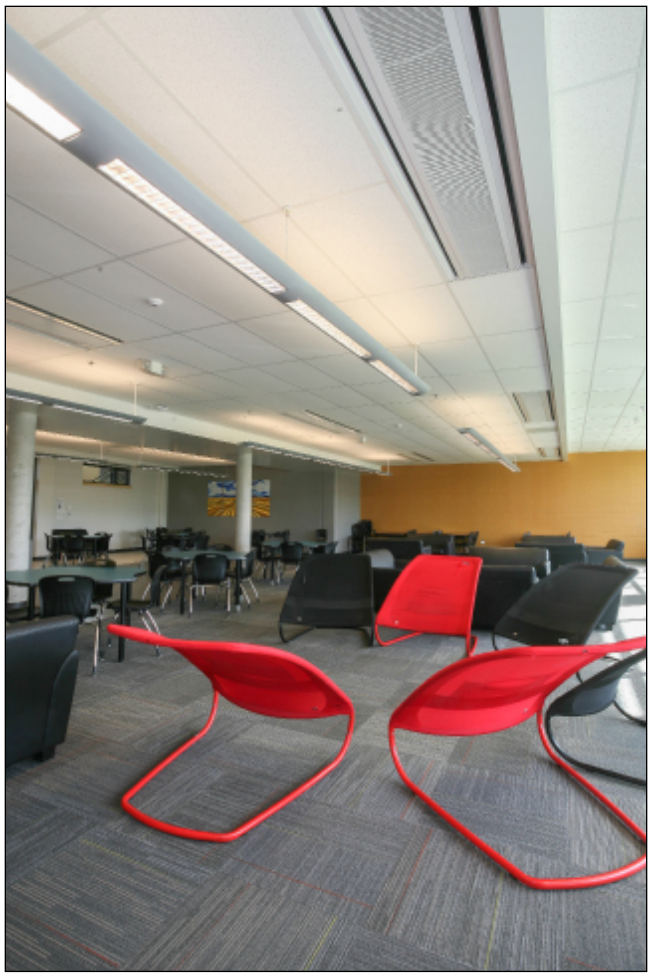

Linear Active Chilled Beams

CBAL2

- Active linear chilled beam with 1-way or 2-way air distribution patterns
- Optimized nozzle design provides high capacity and low noise levels
- Linear design matching commercial architectural styling
- Designed to fit in standard 24-inch ceiling systems
- Optimized diffuser geometry maximizes occupant comfort

CBAL2

healthcare | dual-function | k-12 education | universities | wood grains | energy solutions

See website for Specifications

MODELS:

CBAL2: 24-inch

FINISHES:

Standard Finish - #26 White
Optional Finish - #84 Black

OVERVIEW

Titus active chilled beams features the aerodynamic properties of Titus ceiling diffusers and benefit from the use of using hydronic coils and induced air to reduce energy consumption associated with removal of sensible thermal loads. The primary air is supplied to the chilled beam subsequent to it being discharged through a series of nozzles located along the length of the beam. The nozzles inject the primary air into the mixing chamber at velocities capable of inducing room air through one or two coils and where it mixes with the primary supply air. This mixture of air is then discharged into the space through the ceiling slot diffusers. This provides high cooling outputs with low amounts of primary air. The reduced volume of air results in the reduction of the air handler capacity and size, smaller duct sizes, and the overall energy consumption.

Primary air from the air handling unit is tempered and dehumidified to handle the latent load. The remaining loads in the space are addressed with the heat exchanger which is incorporated into the chilled beam. Applications with low latent cooling loads could use 100 percent outdoor air allowing for use of a dedicated outdoor air system with energy recovery further reducing total system energy consumption.

CBAL2's are offered for both cooling and heating, with a 24" width and lengths from 2 to 10 ft. They can be easily integrated into different grids styles within a suspended ceiling or even in drywall ceilings. The low overall height of the CBAL2 product line is ideal for reducing the space required for false ceiling in any application.

CBAL2 installed in the ceiling of a school

ADVANTAGES

- Removal of high thermal loads is possible in this air/water system
- The size of the air duct system is reduced to a minimum, due to the low supply of primary air
- Substantial reduction in the operating costs, due to low primary air volume
- Improvement of the thermal comfort inside the room
- Suitable for several standard ceiling grids
- Contributing sound levels below NC-30

CBAL2 STANDARD FEATURES

- 1-way or 2-way air distribution patterns
- 24-inch width
- 2 foot to 10 foot lengths, 1 foot increments
- Perforated induced air grille
- Left hand or right hand coil connections
- Side, top, or multi (both) air inlet locations
- 2-pipe and 4-pipe coil configurations
- Configured nozzle geometry for capacity optimization
- Hinged induced air grille for roomside coil access
- Commissioning port with roomside access for balancing
- Mounting brackets with adjustments in two directions
- Durable powder coat finish
- ½" Sweat water coil connections
- Coil air vent

OPTIONS AND ACCESSORIES

- ½" thick foil-faced EcoShield, anti-microbial external insulation
- Coil drain valve
- ½" or ¾ MNPT water coil connections
- 12-inch, 18-inch or 24-inch stainless steel braided hoses
- Lay-in, narrow tee and drop face border types
- Coil lint screen
- Constant volume regulator

CBAL2 2-Way

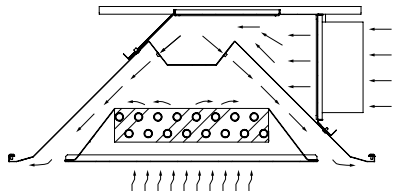

CBAL2 1-Way (front)

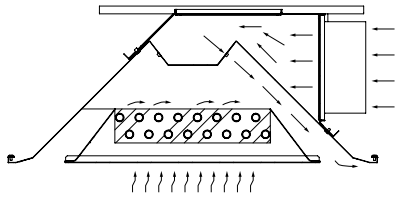

CBAL2 1-Way (back)

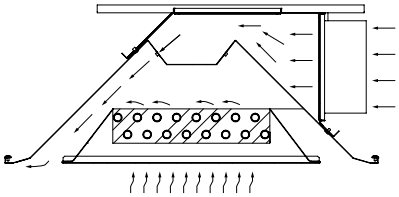

Redefine your comfort zone. ™ | www.titus-hvac.com

CBAL2 UNIT DIMENSIONS

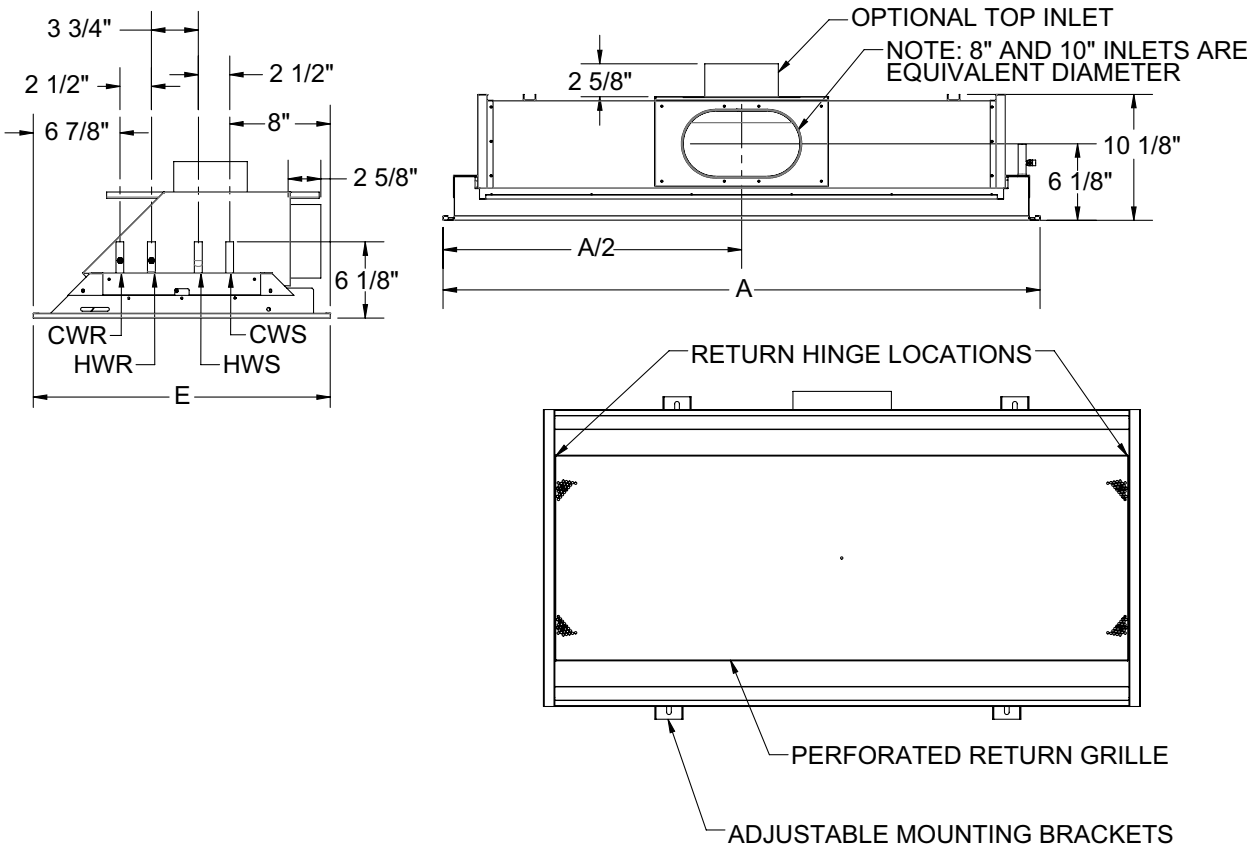

Nominal Length (ft)	BORDER TYPE	
	LAY-IN	NT
	'A' (IN)	'A' (IN)
2	23¾	23⅜
3	35¾	35⅜
4	47¾	47⅜
5	59¾	59⅜
6	71¾	71⅜
7	83¾	83⅜
8	95¾	95⅜
9	107¾	107⅜
10	119¾	119⅜

All dimensions are in inches

CBAL2 CASING ARRANGEMENTS / SIDE INLET 1-WAY

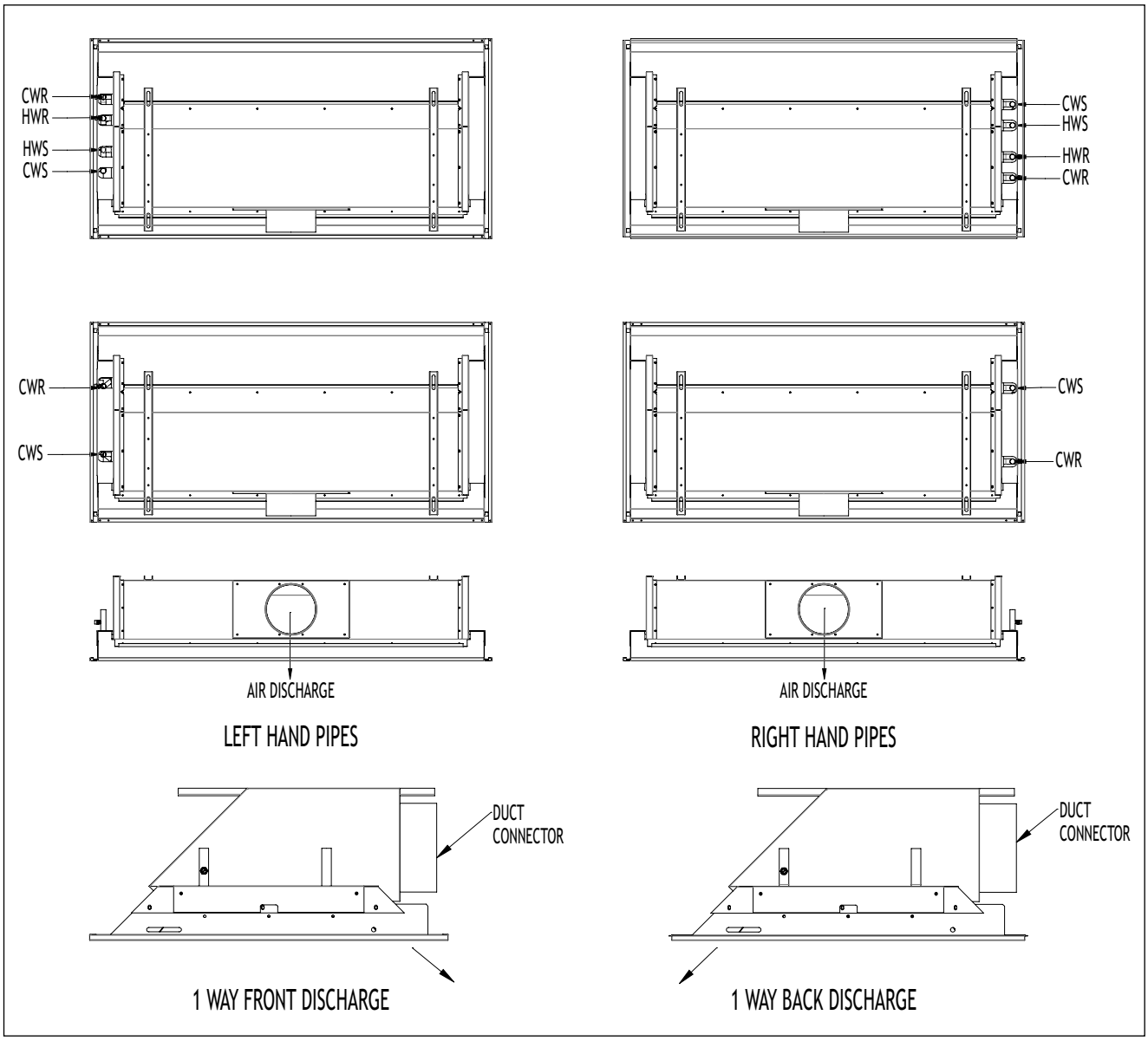

CBAL2 CASING ARRANGEMENTS / SIDE INLET 2-WAY

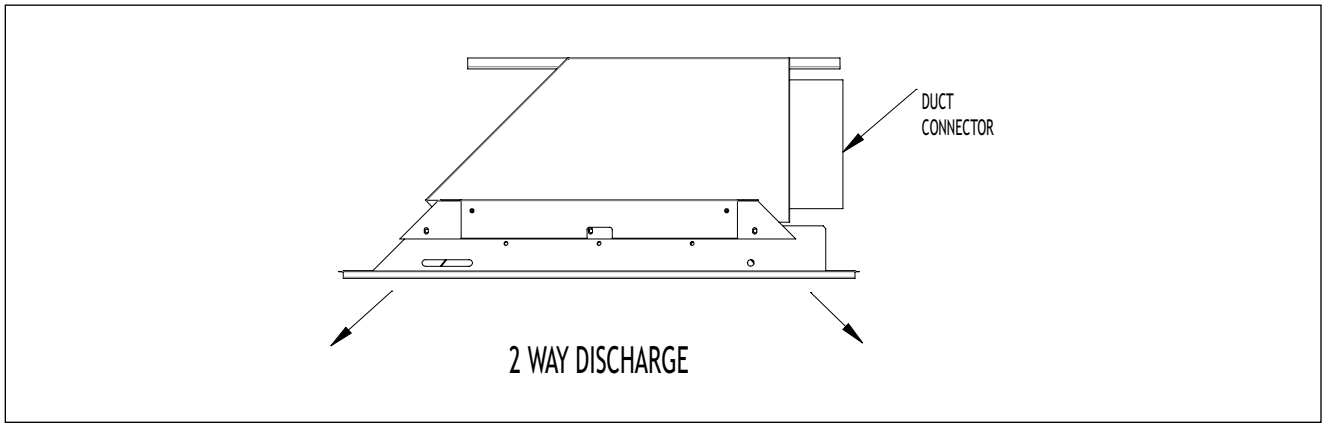

CBAL2 CASING ARRANGEMENTS / TOP INLET 1-WAY

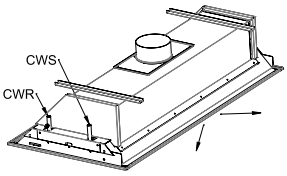

TOP INLET
1 WAY FRONT THROW
2 PIPE LEFT HAND COIL
OR
1 WAY BACK THROW
2 PIPE RIGHT HAND COIL

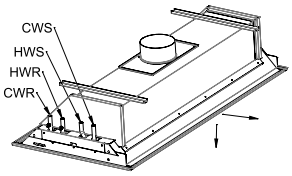

TOP INLET
1 WAY FRONT THROW
4 PIPE LEFT HAND COIL
OR
1 WAY BACK THROW
4 PIPE RIGHT HAND COIL

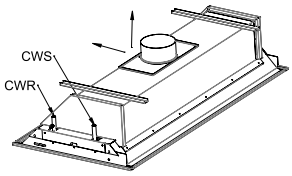

TOP INLET
1 WAY BACK THROW
2 PIPE LEFT HAND COIL
OR
1 WAY FRONT THROW
2 PIPE RIGHT HAND COIL

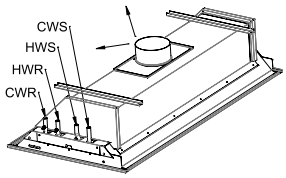

TOP INLET
1 WAY BACK THROW
4 PIPE LEFT HAND COIL
OR
1 WAY FRONT THROW
4 PIPE RIGHT HAND COIL

CBAL2 CASING ARRANGEMENTS / TOP INLET 2-WAY

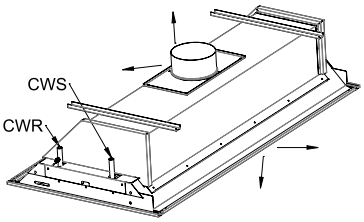

TOP INLET
2 WAY THROW
2 PIPE LEFT HAND COIL
OR
2 WAY THROW
2 PIPE RIGHT HAND COIL

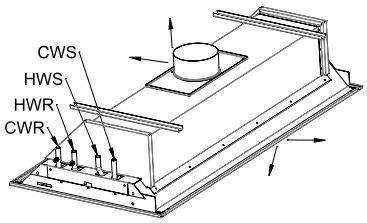

TOP INLET
2 WAY THROW
4 PIPE LEFT HAND COIL
OR
2 WAY THROW
4 PIPE RIGHT HAND COIL

R - Return S - Supply;

HR - Heating Return HS - Heating Supply;

CR - Cooling Return CS - Cooling Supply

CBAL2 / 4-PIPE COOLING

Nominal Length ft	Nozzle Size	Primary Air			Sound	Coil Sensible Cooling (Btu/h)								Induction ratio	Throw
		Inlet Dia.	Flow Rate	Inlet ΔPS		1.0 GPM		1.5 GPM		2.0 GPM		2.5 GPM			
		Inches	CFM	(in. H2O)	NC	qTOTAL	ΔCOIL	qTOTAL	ΔCOIL	qTOTAL	ΔCOIL	qTOTAL	ΔCOIL		
4	M13	4	15	0.20	15	1357	2.90	1412	6.40	1455	1.50	1471	2.30	6.1	0 - 1 - 4
			20	0.35	17	1745		1830		1897		1925			1 - 2 - 7
			25	0.55	20	2035		2143		2208		2248			1 - 3 - 10
	M17	4	20	0.18	16	1419		1484		1537		1556		4.8	1 - 1 - 5
			30	0.40	21	1929		2029		2093		2129			1 - 3 - 10
			40	0.71	25	2460		2608		2725		2785			2 - 5 - 14
	M23	5	40	0.21	20	1703		1799		1850		1885		2.9	2 - 4 - 12
			60	0.48	26	2518		2693		2834		2910			4 - 8 - 18
			75	0.75	29	3069		3317		3459		3570			7 - 12 - 21
	M31	6	70	0.18	20	1923		2035		2109		2153		2.6	2 - 6 - 14
			105	0.41	25	2847		3061		3206		3299			6 - 11 - 20
			140	0.74	31	3528		3831		3987		4131			10 - 14 - 23
6	M13	4	20	0.15	15	1926	4.10	2044	9.30	2051	2.10	2080	3.30	6.1	0 - 1 - 4
			30	0.34	18	2457		2609		2693		2748			1 - 2 - 9
			40	0.61	22	3073		3316		3406		3495			2 - 4 - 13
	M17	5	30	0.17	17	2051		2171		2227		2265		4.8	1 - 2 - 6
			45	0.39	23	2783		2986		3059		3132			2 - 3 - 12
			60	0.69	26	3632		3939		4094		4221			3 - 6 - 17
	M23	6	60	0.21	22	2469		2666		2740		2813		3.9	2 - 5 - 14
			90	0.48	27	3779		4109		4334		4497			5 - 10 - 21
			110	0.71	30	4223		4602		4895		5108			8 - 13 - 24
	M31	8	105	0.19	21	2783		3016		3113		3203		2.6	3 - 7 - 18
			160	0.43	27	4161		4525		4794		4988			7 - 13 - 25
			210	0.74	31	4744		5338		5676		5958			12 - 18 - 29
8	M13	4	25	0.14	15	2882	5.40	3093	1.60	3172	2.80	3227	4.30	6.1	0 - 1 - 4
			40	0.36	20	3889		4187		4348		4462			1 - 2 - 10
			55	0.67	25	4559		4981		5193		5373			2 - 5 - 16
	M17	5	40	0.18	19	3003		3228		3333		3406		4.8	1 - 2 - 7
			60	0.40	24	3671		3974		4151		4281			2 - 4 - 14
			80	0.70	28	4632		5098		5358		5571			3 - 7 - 19
	M23	8	80	0.22	24	3097		3380		3526		3646		3.9	2 - 5 - 16
			120	0.49	29	4614		5128		5485		5746			5 - 12 - 25
			140	0.67	31	4976		5648		6092		6417			8- 15 - 28
	M31	10*	145	0.20	24	3563		3916		4098		4253		2.6	4 - 8 - 21
			215	0.45	29	5061		5711		6145		6462			8 - 16 - 29
			260	0.66	34	5612		6429		6964		7379			14 - 20 - 32
10	M13	5	35	0.17	16	3767	6.70	4103	1.90	4243	3.40	4342	5.30	6.1	1 - 1 - 5
			50	0.35	21	4586		5030		5267		5434			1 - 3 - 12
			70	0.69	25	5332		5969		6292		6559			2 - 5 - 18
	M17	6	55	0.22	21	3807		4155		4333		4458		4.8	1 - 2 - 9
			80	0.46	26	4384		4895		5163		5370			2 - 5 - 17
			100	0.71	29	5335		6009		6389		6696			4 - 9 - 22
	M23	8	100	0.23	25	3569		3991		4208		4382		3.9	3 - 6 - 18
			150	0.51	31	5289		6028		6538		6912			6 - 13 - 28
			180	0.73	33	5708		6694		7344		7825			9 - 17- 32
	M31	10*	180	0.22	26	4082		4585		4847		5068		2.6	4 - 9 - 23
			240	0.39	31	5483		6249		6778		7165			7 - 15 - 30
			300	0.61	40	6000		7103		7812		8339			11 - 19 - 34

Note: Reference page U15 for operational conditions used for performance notes

CBAL2 / 4-PIPE HEATING

Nominal Length ft	Nozzle Size	Primary Air			Sound	Coil Heating (Btu/h)								Induction ratio	Throw
		Inlet Dia.	Flow Rate	Inlet ΔPS		0.5 GPM		1.0 GPM		1.5 GPM		2.0 GPM			
		Inches	CFM	(in. H2O)	NC	qTOTAL	ΔCOIL	qTOTAL	ΔCOIL	qTOTAL	ΔCOIL	qTOTAL	ΔCOIL		
4	M13	4	15	0.2	15	2108	0.20	2485	0.60	2586	1.40	2664	2.50	6.1	0 - 1 - 4
			20	0.35	17	2663		3196		3350		3473			1 - 2 - 7
			25	0.55	20	3061		3725		3923		4043			1 - 3 - 10
	M17	4	20	0.18	16	2193		2598		2716		2814		4.8	1 - 1 - 5
			30	0.4	21	2906		3531		3715		3831			1 - 3 - 10
			40	0.71	25	3549		4503		4776		4999			2 - 5 - 14
	M23	5	40	0.21	20	2548		3118		3295		3387		3.9	2 - 4 - 12
			60	0.48	26	3592		4611		4930		5188			4 - 8 - 18
			75	0.75	29	4500		5618		6073		6334			7 - 12 - 21
	M31	6	70	0.18	20	2826		3520		3727		3862		2.6	2 - 6 - 14
			105	0.41	25	4136		5212		5605		5870			6 - 11 - 20
			140	0.74	31	5007		6459		7015		7300			10 - 14 - 23
6	M13	4	20	0.15	15	2905	0.20	3526	0.90	3743	2.10	3755	3.70	6.1	0 - 1 - 4
			30	0.34	18	3585		4500		4778		4931			1 - 2 - 9
			40	0.61	22	4400		5627		6071		6236			2 - 4 - 13
	M17	5	30	0.17	17	3036		3756		3974		4078		4.8	1 - 2 - 6
			45	0.39	23	4020		5095		5467		5601			2 - 3 - 12
			60	0.69	26	5123		6649		7212		7496			3 - 6 - 17
	M23	6	60	0.21	22	3529		4520		4882		5017		3.9	2 - 5 - 14
			90	0.48	27	5241		6920		7523		7936			5 - 10 - 21
			110	0.71	30	5744		7733		8427		8962			8 - 13 - 24
	M31	8	105	0.19	21	3948		5095		5521		5701		2.6	3 - 7 - 18
			160	0.43	27	5703		7618		8266		8778			7 - 13 - 25
			210	0.74	31	6552		8686		9774		10393			12 - 18 - 29
8	M13	4	25	0.14	15	4320	0.30	5277	1.20	5663	2.70	5808	4.80	6.1	0 - 1 - 4
			40	0.36	20	5520		7121		7665		7961			1 - 2 - 10
			55	0.67	25	6249		8347		9120		9509			2 - 5 - 16
	M17	5	40	0.18	19	4377		5499		5910		6102		4.8	1 - 2 - 7
			60	0.4	24	5044		6722		7277		7600			2 - 4 - 14
			80	0.7	28	6339		8481		9333		9811			3 - 7 - 19
	M23	8	80	0.22	24	4247		5671		6190		6455		3.9	2 - 5 - 16
			120	0.49	29	6267		8448		9390		10043			5 - 12 - 25
			140	0.67	31	6659		9111		10341		11154			8 - 15- 28
	M31	10*	145	0.2	24	4878		6524		7170		7503		2.6	4 - 8 - 21
			215	0.45	29	6798		9266		10456		11252			8 - 16 - 29
			260	0.66	34	7350		10275		11772		12752			14 - 20 - 32
10	M13	5	35	0.17	16	5417	0.40	6897	1.50	7512	3.40	7769	6.00	6.1	1 - 1 - 5
			50	0.35	21	6333		8397		9210		9643			1 - 3 - 12
			70	0.69	25	7047		9762		10929		11521			2 - 5 - 18
	M17	6	55	0.22	21	5289		6971		7607		7933		4.8	1 - 2 - 9
			80	0.46	26	5928		8027		8963		9453			2 - 5 - 17
			100	0.71	29	6852		9769		11003		11699			4 - 9 - 22
	M23	8	100	0.23	25	4764		6534		7307		7705		3.9	3 - 6 - 18
			150	0.51	31	6618		9685		11037		11971			6 - 13 - 28
			180	0.73	33	7158		10452		12257		13446			10 - 17 - 32
	M31	10*	180	0.22	26	5285		7475		8395		8874		2.6	4 - 9 - 23
			240	0.39	31	6861		10040		11443		12410			7 - 15 - 30
			300	0.61	40	7552		11039		13005		14304			11 - 19 - 34

Note: Reference page U15 for operational conditions used for performance notes

CBAL2 / 2-PIPE COOLING

Nominal Length ft	Nozzle Size	Primary Air			Sound	Coil Sensible Cooling (Btu/h)								Induction ratio	Throw
		Inlet Dia.	Flow Rate	Inlet ΔPS		1.0 GPM		1.5 GPM		2.0 GPM		2.5 GPM			
		Inches	CFM	(in. H2O)	NC	qTOTAL	ΔCOIL	qTOTAL	ΔCOIL	qTOTAL	ΔCOIL	qTOTAL	ΔCOIL		
4	M13	4	15	0.20	15	1447	3.80	1506	8.60	1552	1.90	1569	3.00	6.1	0 - 1 - 4
			20	0.35	17	1862		1952		2023		2053			1 - 2 - 7
			25	0.55	20	2170		2286		2355		2398			1 - 3 - 10
	M17	4	20	0.18	16	1514		1583		1640		1660		4.8	1 - 1 - 5
			30	0.40	21	2057		2164		2232		2271			1 - 3 - 10
			40	0.71	25	2624		2782		2906		2971			2 - 5 - 14
	M23	5	40	0.21	20	1816		8.6		1973		2011		3.9	2 - 4 - 12
			60	0.48	26	2686		2872		3023		3104			4 - 8 - 18
			75	0.75	29	3273		3538		3690		3808			7 - 12 - 21
	M31	6	70	0.18	20	2051		2171		2250		2296		2.6	2 - 6 - 14
			105	0.41	25	3036		3265		3420		3518			6 - 11 - 20
			140	0.74	31	3763		4087		4253		4406			10 - 14 - 23
6	M13	4	20	0.15	15	2054	5.50	2181	1.60	2188	2.80	2219	4.40	6.1	0 - 1 - 4
			30	0.34	18	2621		2783		2872		2931			1 - 2 - 9
			40	0.61	22	3278		3537		3633		3728			2 - 4 - 13
	M17	5	30	0.17	17	2188		2315		2376		2417		4.8	1 - 2 - 6
			45	0.39	23	2968		3185		3263		3341			2 - 3 - 12
			60	0.69	26	3874		4201		4367		4502			3 - 6 - 17
	M23	6	60	0.21	22	2633		2844		2923		3000		3.9	2 - 5 - 14
			90	0.48	27	4031		4383		4623		4797			5 - 10 - 21
			110	0.71	30	4505		4909		5221		5448			8 - 14 - 26
	M31	8	105	0.19	21	2968		3217		3321		3416		2.6	3 - 7 - 18
			160	0.43	27	4438		4827		5114		5321			7 - 13 - 25
			210	0.74	31	5060		5694		6055		6356			12 - 18 - 29
8	M13	4	25	0.14	15	3074	7.20	3299	2.10	3384	3.70	3442	5.70	6.1	0 - 1 - 4
			40	0.36	20	4148		4466		4638		4760			1 - 2 - 10
			55	0.67	25	4863		5313		5540		5731			2 - 5 - 16
	M17	5	40	0.18	19	3203		3443		3555		3633		4.8	1 - 2 - 7
			60	0.40	24	3916		4239		4428		4566			2 - 4 - 14
			80	0.70	28	4941		5437		5716		5943			3 - 7 - 19
	M23	8	80	0.22	24	3304		3606		3761		3889		3.9	2 - 5 - 16
			120	0.49	29	4922		5470		5851		6130			5 - 12 - 25
			140	0.67	31	5308		6024		6496		6844			9 - 16 - 30
	M31	10*	145	0.20	24	3801		4177		4371		4537		2.6	4 - 8 - 21
			215	0.45	29	5398		6091		6555		6893			8 - 16 - 29
			260	0.66	34	5986		6858		7429		7871			14 - 21 - 33
10	M13	5	35	0.17	16	4018	8.90	4376	2.60	4526	4.60	4632	7.10	6.1	1 - 1 - 5
			50	0.35	21	4892		5366		5618		5796			1 - 3 - 12
			70	0.69	25	5687		6367		6712		6997			2 - 5 - 18
	M17	6	55	0.22	21	4061		4432		4621		4755		4.8	1 - 2 - 9
			80	0.46	26	4676		5222		5507		5728			2 - 5 - 17
			100	0.71	29	5691		6410		6815		7143			4 - 9 - 22
	M23	8	100	0.23	25	3807		4257		4488		4674		3.9	3 - 6 - 18
			150	0.51	31	5642		6430		6974		7372			6 - 13 - 28
			180	0.73	33	6000		7141		7833		8346			10 - 18 - 33
	M31	10*	180	0.22	26	4354		4891		5170		5405		2.6	4 - 9 - 23
			240	0.39	31	5849		6666		7230		7643			7 - 15 - 30
			300	0.61	40	6000		7576		8333		8894			11 - 19 - 34

Note: Reference page U15 for operational conditions used for performance notes

CBAL2 / 2-PIPE HEATING

Nominal Length ft	Nozzle Size	Primary Air			Sound	Coil Heating (Btu/h)								Induction ratio	Throw
		Inlet Dia.	Flow Rate	Inlet ΔPS		0.5 GPM		1.0 GPM		1.5 GPM		2.0 GPM			
		Inches	CFM	(in. H2O)	NC	qTOTAL	ΔCOIL	qTOTAL	ΔCOIL	qTOTAL	ΔCOIL	qTOTAL	ΔCOIL		
4	M13	4	15	0.2	15	3308	1.00	3900	3.80	4059	8.60	4181	1.90	6.1	0-1-4
			20	0.35	17	4179		5016		5259		5452			1-2-7
			25	0.55	20	4804		5848		6159		6347			1-3-10
	M17	4	20	0.18	16	3442		4079		4264		4418		4.8	1-1-5
			30	0.4	21	4561		5543		5832		6014			1-3-10
			40	0.71	25	5572		7069		7497		7831			2-5-14
	M23	5	40	0.21	20	4000		4894		5172		5316		3.9	2-4-12
			60	0.48	26	5639		7237		7739		8144			4-8-18
			75	0.75	29	7064		8819		9533		9942			7-12-21
	M31	6	70	0.18	20	4437		5526		5850		6062		2.6	2-6-14
			105	0.41	25	6492		8181		8799		9214			6-11-20
			140	0.74	31	7859		10139		11012		11459			10-14-23
6	M13	4	20	0.15	15	4561	1.40	5535	5.50	5876	1.60	5894	2.80	6.1	0-1-4
			30	0.34	18	5628		7063		7500		7740			1-2-9
			40	0.61	22	6907		8832		9530		9789			2-4-13
	M17	5	30	0.17	17	4765		5896		6238		6402		4.8	1-2-6
			45	0.39	23	6310		7998		8582		8791			2-3-12
			60	0.69	26	8041		10438		11321		11766			3-6-17
	M23	6	60	0.21	22	5539		7095		7664		7876		3.9	2-5-14
			90	0.48	27	8227		10862		11809		12458			5-10-21
			110	0.71	30	9016		12139		13228		14068			8-13-24
	M31	10*	105	0.19	21	6197		7997		8667		8948		2.6	3-7-18
			160	0.43	27	8953		11958		13007		13780			7-13-25
			210	0.74	31	10284		13635		15343		16314			12-18-29
8	M13	4	25	0.14	15	6781	1.80	8283	7.20	8889	2.10	9117	3.70	6.1	0-1-4
			40	0.36	20	8665		11178		12033		12497			1-2-10
			55	0.67	25	9810		13102		14315		14927			2-5-16
	M17	5	40	0.18	19	6870		8631		9278		9579		4.8	1-2-7
			60	0.4	24	7918		10551		11422		11931			2-4-14
			80	0.7	28	9950		13312		14651		15401			3-7-19
	M23	8	80	0.22	24	6667		8902		9716		10133		3.9	2-5-16
			120	0.49	29	9637		13261		14739		15764			5-12-25
			140	0.67	31	10453		14302		16233		17509			8-15-28
	M31	10*	145	0.2	24	7657		10241		11254		11777		2.6	4-8-21
			215	0.45	29	10671		14545		16413		17662			8-16-29
			260	0.66	34	11538		16129		18479		20017			14-20-32
10	M13	5	35	0.17	16	8504	2.20	10826	8.90	11792	2.60	12195	4.60	6.1	1-1-5
			50	0.35	21	9941		13182		14458		15137			1-3-12
			70	0.69	25	11062		15324		17155		18084			2-5-18
	M17	6	55	0.22	21	8302		10943		11941		12452		4.8	1-2-9
			80	0.46	26	9306		12599		14070		14839			2-5-17
			100	0.71	29	10756		15334		17272		18363			4-9-22
	M23	8	100	0.23	25	7479		10257		11470		12094		3.9	3-6-18
			150	0.51	31	10389		15202		17326		18791			6-13-28
			180	0.73	33	11235		16406		19240		21107			9-17-32
	M31	10*	180	0.22	26	8295		11733		13178		13930		2.6	4-9-23
			240	0.39	31	10770		15760		17962		19481			7-15-30
			300	0.61	40	11854		17329		20414		22453			11-19-34

Note: Reference page U15 for operational conditions used for performance notes

NOTES:

1. All performance data based on test performed in accordance with ASHRAE Standard 200-2018.
2. ΔP_s values are measured in inches of water
3. NC values are based on room absorption of 10 dB. A dash (-) indicates an NC value less than 15.
4. Throw values are based on isothermal supply air and represent throw distances to terminal velocities of 150, 100 and 50 fpm respectively
5. ΔP_{Coil} values are measured in feet of water. ΔP_{Coil} values in shaded cells indicate use of a two circuit coil. All other values represent a single circuit coil.
6. Induction ratio is multiplied by the volume flow rate of primary air to estimate the volume flow rate of room air entrained through the coil
7. * denotes oval inlet air connection.

Cooling performance:

- Cooling capacity listed (qTOTAL) is the total sensible heat removal by the beam's integral coil. It does not include any contribution or offset by the primary air.

- Capacity is based on 18°F ΔT between the induced air and the chilled water supply. Table 1 provides correction factors for other temperature differentials.

- Primary air sensible cooling contribution can be calculated by the following equation:

$$q_{SENSPA} = 1.085 \times CFM_{PA} \times (T_{ROOM} - T_{PA})$$

- Primary air latent cooling can be calculated by the following equation:

$$q_{LATENT} = 0.69 \times CFM_{PA} \times (W_{ROOM} - W_{PA})$$

where W_{ROOM} and W_{PA} are the humidity ratio of the room and primary air respectively expressed in Grains of moisture per pound dry air

TABLE 4: CORRECTION FOR (ΔT) BETWEEN ENTERING AIR AND ENTERING CHILLED WATER

Actual ΔT	10	12	14	16	**18**	20	22	24
Multiply Table Value by:	0.56	0.67	0.78	0.89	**1.00**	1.11	1.22	1.33

Heating performance:

- Heating capacity listed (qTOTAL) is the sensible heat removal by the beam's integral coil. It does not include any contribution or offset by the primary air

- Capacity is based on 50°F ΔT between the induced air and the heating water supply. Table 2 provides correction factors for other temperature differentials.

- Primary air sensible heating offset (or contribution) can be calculated by the following equation:

$$q_{SENSPA} = 1.085 \times CFM_{PA} \times (T_{PA} - T_{ROOM})$$

if the primary air temperature is lower than that of the room, it will offset the coil's heating

if the primary air temperature is higher than that of the room, it will contribute to the coil's heating

TABLE 2: CORRECTION FOR (ΔT) BETWEEN ENTERING AIR AND ENTERING HEATING WATER

Actual ΔT	20	30	40	**50**	60	70	80	90	100	110	120
Multiply Table Value by:	0.40	0.60	0.80	**1.00**	1.20	1.40	1.60	1.80	2.00	2.20	2.40

Legend:

ΔP_S = Unit Inlet Pressure [in wg]

qCoil = Sensible Capacity, Coil [Btu/h]

ΔCoil = Water coil pressure drop [ft wg]

q_{SENSPA} = Sensible Capacity, Primary Air [Btu/h]

CFM_{PA} = Air Flowrate, Primary Air [CFM]

T_{PA} = Temperature Primary Air [°F]

T_{ROOM} = Temperature Room Air [°F]

q_{LATENT} = Latent Capacity, Primary Air [Btu/h]

CBE2

- Exposed linear chilled beam with 1-way or 2-way air distribution patterns
- Optimized nozzle design provides high capacity and low noise levels
- Linear design matching commercial architectural styling
- Integral coanda plates for ceiling independent operation
- Optimized diffuser geometry maximizes occupant comfort

CBE2-24

CBE2-12

dual-function | open ceiling | k-12 education | universities | energy solutions

See website for Specifications

MODELS:

CBE2-24
CBE2-12

FINISHES:

Standard Finish - #26 White
Optional Finish - #84 Black

OVERVIEW

Titus active chilled beams features the aerodynamic properties of Titus ceiling diffusers and benefit from the use of using hydronic coils and induced air to reduce energy consumption associated with removal of sensible thermal loads. The primary air is supplied to the chilled beam subsequent to it being discharged through a series of nozzles located along the length of the beam. The nozzles inject the primary air into the mixing chamber at velocities capable of inducing room air through its water coil where it mixes with the primary supply air. This mixture of air is then discharged into the space through the ceiling slot diffusers. This provides high cooling outputs with low amounts of primary air. The reduced volume of air results in the reduction of the air handler capacity and size, smaller duct sizes, and the overall energy consumption.

The supplied air from the air handling unit is tempered and dehumidified to handle the latent load. The remaining loads in the space are addressed with the heat exchanger which is incorporated into the chilled beam. Applications with low latent cooling loads could use 100 percent outdoor air allowing for use of a dedicated outdoor air system with energy recovery further reducing total system energy consumption.

The CBE2's are offered for both cooling and heating and lengths from 2 to 10 ft. The low overall height of the CBE2 is ideal for open ceiling or retrofit applications with limited floor height.

ADVANTAGES

- Removal of high thermal loads is possible in this air/water system
- The size of the air duct system is reduced to a minimum, due to the low supply of primary air
- Substantial reduction in the operating costs, due to low primary air volume
- Improvement of the thermal comfort inside the room
- Suitable for several standard ceiling grids

CBE2 installed in an open ceiling of a college classroom

- Contributing sound levels below NC-30

CBE2 STANDARD FEATURES

- 1-way or 2-way air distribution patterns
- 12-inch or 24-inch width
- 2 foot to 10 foot lengths, 1 foot increments
- Perforated induced air grille
- Left hand or Right hand coil connections
- Side, top, or multi (both - CBE2-24 only) air inlet locations
- 2-pipe and 4-pipe coil configurations
- Configured nozzle geometry for capacity optimization
- Hinged induced air grille for roomside coil access
- Commissioning port with roomside access for balancing
- Mounting brackets with adjustments in two directions
- Durable powder coat finish
- ½" Sweat water coil connections
- Coil air vent

OPTIONS AND ACCESSORIES

- ½" thick foil-faced EcoShield, anti-microbial external insulation
- Coil drain valve
- ½" or ¾ MNPT water coil connections
- 12-inch, 18-inch or 24-inch stainless steel braided hoses
- Coil lint screen
- Constant volume regulator

CBE2 2-Way

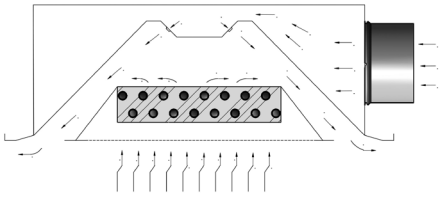

CBE2 1-Way (front)

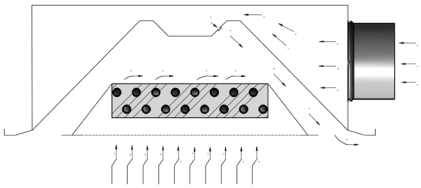

CBE2 1-Way (back)

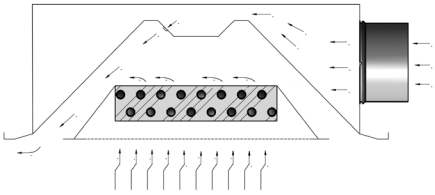

Redefine your comfort zone. ™ | www.titus-hvac.com

CBE2 UNIT DIMENSIONS

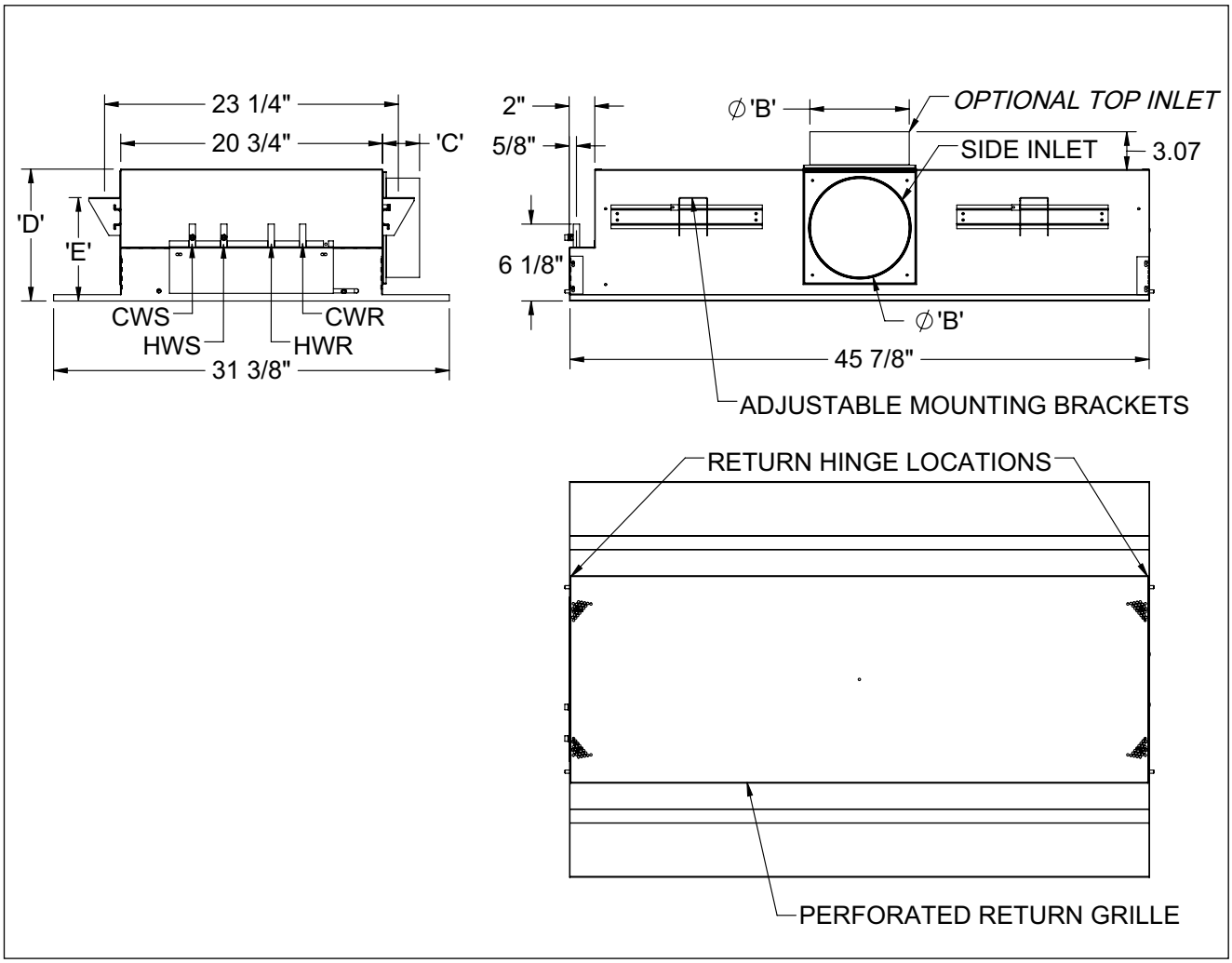

Nominal Unit Length (ft)	'A' (IN)
2	21 7/8
3	33 7/8
4	45 7/8
5	57 7/8
6	69 7/8
7	81 7/8
8	93 7/8
9	105 7/8
10	117 7/8

Nominal Inlet Dia. (IN)	'B' (IN)	'C' (IN)*	'D' (IN)	'E' (IN)
5	4 7/8	3	8 3/8	6¼
6	5 7/8	3	8 3/8	6¼
8	7 7/8	3	10 3/8	8¼
8**	7 7/8	--	8 3/8	6¼

*Side Inlet Only

**Top Inlet Only

Integrated ¼" pressure port for balancing/commissioning accessable from roomside opposite coil connection

All dimensions are in inches

CBE2 CASING ARRANGEMENTS / SIDE INLET 1-WAY

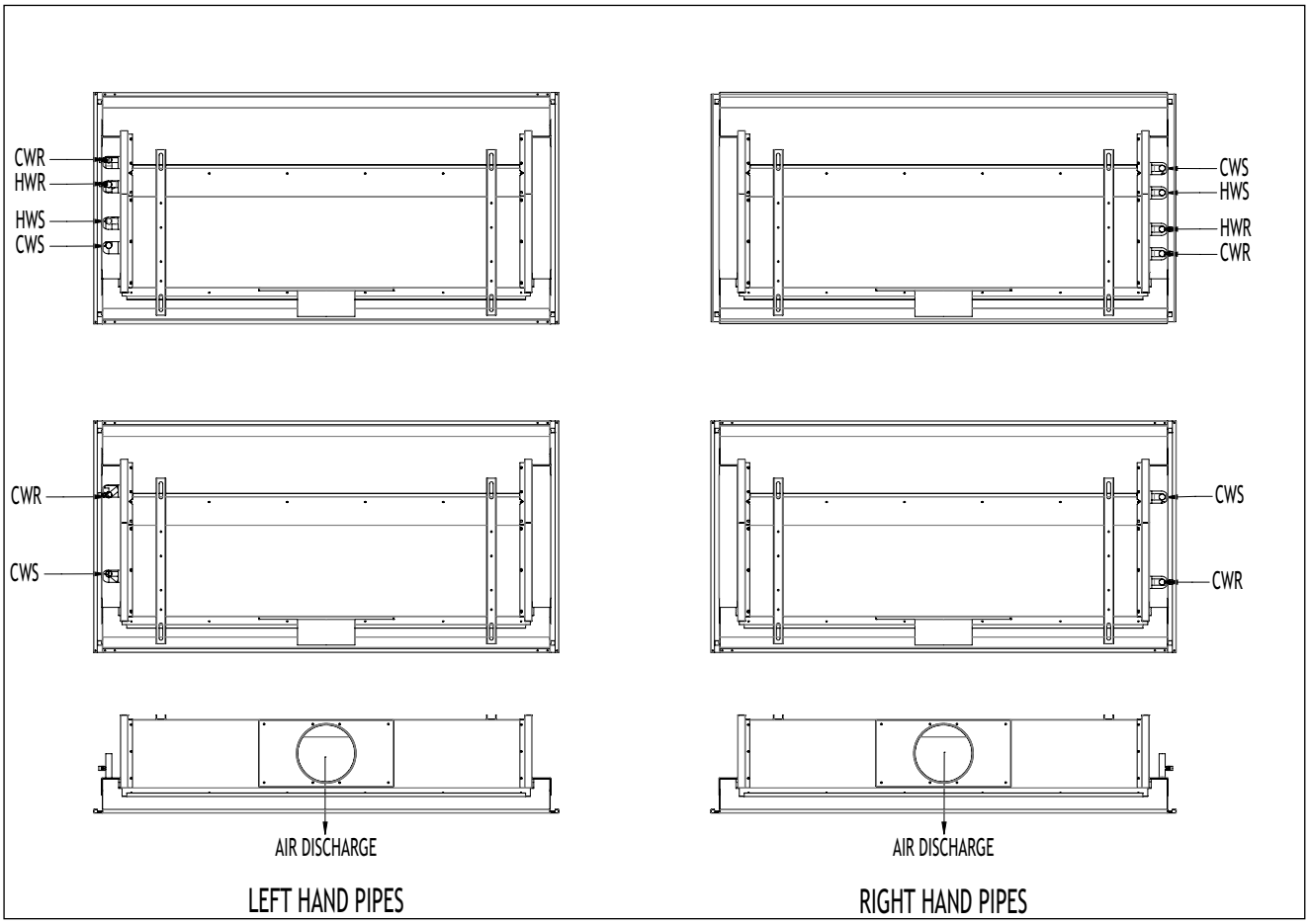

CBE2 CASING ARRANGEMENTS / SIDE INLET 2-WAY

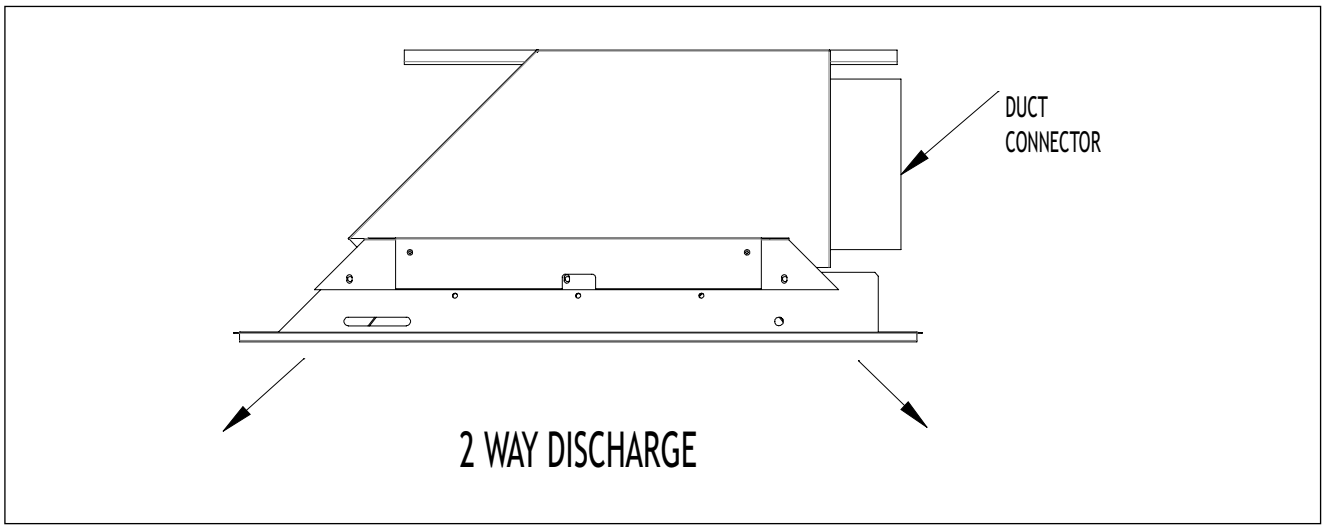

Redefine your comfort zone. ™ | www.titus-hvac.com

CBE2 CASING ARRANGEMENTS / TOP INLET 1-WAY

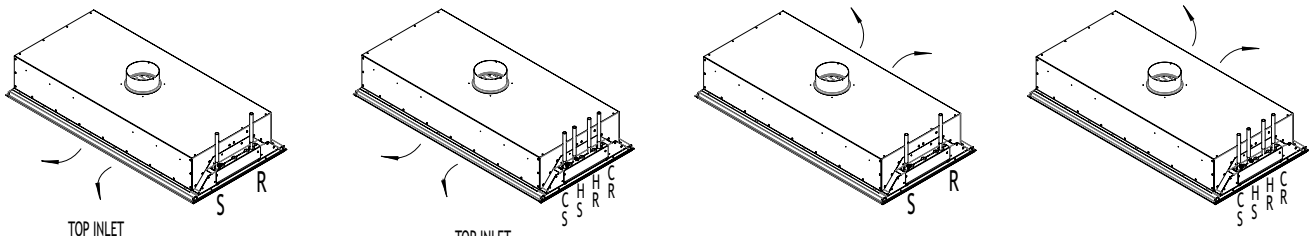

TOP INLET
1 WAY 2 PIPE
RIGHT HAND
AIR FLOW FRONT

TOP INLET
1 WAY 4 PIPE
RIGHT HAND
AIR FLOW FRONT

TOP INLET
1 WAY 2 PIPE
RIGHT HAND
AIR FLOW BACK

TOP INLET
1 WAY 4 PIPE
RIGHT HAND
AIR FLOW BACK

CBE2 CASING ARRANGEMENTS / TOP INLET 2-WAY

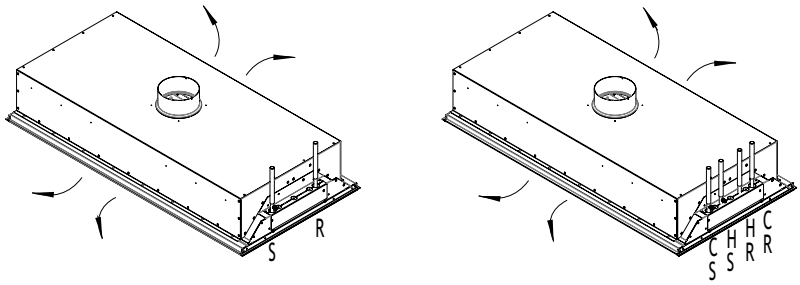

TOP INLET
2 WAY 2 PIPE
RIGHT HAND

TOP INLET
2 WAY 4 PIPE
RIGHT HAND

R - Return S - Supply;

HR - Heating Return HS - Heating Supply;

CR - Cooling Return CS - Cooling Supply

CBE2-24 / 4-PIPE COOLING

Nominal Length ft	Nozzle Size	Primary Air			Sound	Coil Sensible Cooling (Btu/h)								Induction ratio	Throw
		Inlet Dia.	Flow Rate	Inlet ΔPS		1.0 GPM		1.5 GPM		2.0 GPM		2.5 GPM			
		Inches	CFM	(in. H2O)	NC	qTOTAL	ΔCOIL	qTOTAL	ΔCOIL	qTOTAL	ΔCOIL	qTOTAL	ΔCOIL		
4	M13	4	15	0.20	15	1357	2.90	1412	6.40	1455	1.50	1471	2.30	6.1	0 - 1 - 4
			20	0.35	17	1745		1830		1897		1925			1 - 2 - 7
			25	0.55	20	2035		2143		2208		2248			1 - 3 - 10
	M17	4	20	0.18	16	1419		1484		1537		1556		4.8	1 - 1 - 5
			30	0.40	21	1929		2029		2093		2129			1 - 3 - 10
			40	0.71	25	2460		2608		2725		2785			2 - 5 - 14
	M23	5	40	0.21	20	1703		1799		1850		1885		2.9	2 - 4 - 12
			60	0.48	26	2518		2693		2834		2910			4 - 8 - 18
			75	0.75	29	3069		3317		3459		3570			7 - 12 - 21
	M31	6	70	0.18	20	1923		2035		2109		2153		2.6	2 - 6 - 14
			105	0.41	25	2847		3061		3206		3299			6 - 11 - 20
			140	0.74	31	3528		3831		3987		4131			10 - 14 - 23
6	M13	4	20	0.15	15	1926	4.10	2044	9.30	2051	2.10	2080	3.30	6.1	0 - 1 - 4
			30	0.34	18	2457		2609		2693		2748			1 - 2 - 9
			40	0.61	22	3073		3316		3406		3495			2 - 4 - 13
	M17	5	30	0.17	17	2051		2171		2227		2265		4.8	1 - 2 - 6
			45	0.39	23	2783		2986		3059		3132			2 - 3 - 12
			60	0.69	26	3632		3939		4094		4221			3 - 6 - 17
	M23	6	60	0.21	22	2469		2666		2740		2813		3.9	2 - 5 - 14
			90	0.48	27	3779		4109		4334		4497			5 - 10 - 21
			110	0.71	30	4223		4602		4895		5108			8 - 13 - 24
	M31	8	105	0.19	21	2783		3016		3113		3203		2.6	3 - 7 - 18
			160	0.43	27	4161		4525		4794		4988			7 - 13 - 25
			210	0.74	31	4744		5338		5676		5958			12 - 18 - 29
8	M13	4	25	0.14	15	2882	5.40	3093	1.60	3172	2.80	3227	4.30	6.1	0 - 1 - 4
			40	0.36	20	3889		4187		4348		4462			1 - 2 - 10
			55	0.67	25	4559		4981		5193		5373			2 - 5 - 16
	M17	5	40	0.18	19	3003		3228		3333		3406		4.8	1 - 2 - 7
			60	0.40	24	3671		3974		4151		4281			2 - 4 - 14
			80	0.70	28	4632		5098		5358		5571			3 - 7 - 19
	M23	8	80	0.22	24	3097		3380		3526		3646		3.9	2 - 5 - 16
			120	0.49	29	4614		5128		5485		5746			5 - 12 - 25
			140	0.67	31	4976		5648		6092		6417			8- 15 - 28
	M31	10*	145	0.20	24	3563		3916		4098		4253		2.6	4 - 8 - 21
			215	0.45	29	5061		5711		6145		6462			8 - 16 - 29
			260	0.66	34	5612		6429		6964		7379			14 - 20 - 32
10	M13	5	35	0.17	16	3767	6.70	4103	1.90	4243	3.40	4342	5.30	6.1	1 - 1 - 5
			50	0.35	21	4586		5030		5267		5434			1 - 3 - 12
			70	0.69	25	5332		5969		6292		6559			2 - 5 - 18
	M17	6	55	0.22	21	3807		4155		4333		4458		4.8	1 - 2 - 9
			80	0.46	26	4384		4895		5163		5370			2 - 5 - 17
			100	0.71	29	5335		6009		6389		6696			4 - 9 - 22
	M23	8	100	0.23	25	3569		3991		4208		4382		3.9	3 - 6 - 18
			150	0.51	31	5289		6028		6538		6912			6 - 13 - 28
			180	0.73	33	5708		6694		7344		7825			9 - 17- 32
	M31	10*	180	0.22	26	4082		4585		4847		5068		2.6	4 - 9 - 23
			240	0.39	31	5483		6249		6778		7165			7 - 15 - 30
			300	0.61	40	6000		7103		7812		8339			11 - 19 - 34

Note: Reference page U29 for operational conditions used for performance notes

CBE2-24 / 4-PIPE HEATING

Nominal Length ft	Nozzle Size	Primary Air			Sound	Coil Heating (Btu/h)								Induction ratio	Throw
		Inlet Dia.	Flow Rate	Inlet ΔPS		0.5 GPM		1.0 GPM		1.5 GPM		2.0 GPM			
		Inches	CFM	(in. H2O)	NC	qTOTAL	ΔCOIL	qTOTAL	ΔCOIL	qTOTAL	ΔCOIL	qTOTAL	ΔCOIL		
4	M13	4	15	0.2	15	2108	0.20	2485	0.60	2586	1.40	2664	2.50	6.1	0 - 1 - 4
			20	0.35	17	2663		3196		3350		3473			1 - 2 - 7
			25	0.55	20	3061		3725		3923		4043			1 - 3 - 10
	M17	4	20	0.18	16	2193		2598		2716		2814		4.8	1 - 1 - 5
			30	0.4	21	2906		3531		3715		3831			1 - 3 - 10
			40	0.71	25	3549		4503		4776		4999			2 - 5 - 14
	M23	5	40	0.21	20	2548		3118		3295		3387		3.9	2 - 4 - 12
			60	0.48	26	3592		4611		4930		5188			4 - 8 - 18
			75	0.75	29	4500		5618		6073		6334			7 - 12 - 21
	M31	6	70	0.18	20	2826		3520		3727		3862		2.6	2 - 6 - 14
			105	0.41	25	4136		5212		5605		5870			6 - 11 - 20
			140	0.74	31	5007		6459		7015		7300			10 - 14 - 23
6	M13	4	20	0.15	15	2905	0.20	3526	0.90	3743	2.10	3755	3.70	6.1	0 - 1 - 4
			30	0.34	18	3585		4500		4778		4931			1 - 2 - 9
			40	0.61	22	4400		5627		6071		6236			2 - 4 - 13
	M17	5	30	0.17	17	3036		3756		3974		4078		4.8	1 - 2 - 6
			45	0.39	23	4020		5095		5467		5601			2 - 3 - 12
			60	0.69	26	5123		6649		7212		7496			3 - 6 - 17
	M23	6	60	0.21	22	3529		4520		4882		5017		3.9	2 - 5 - 14
			90	0.48	27	5241		6920		7523		7936			5 - 10 - 21
			110	0.71	30	5744		7733		8427		8962			8 - 13 - 24
	M31	8	105	0.19	21	3948		5095		5521		5701		2.6	3 - 7 - 18
			160	0.43	27	5703		7618		8266		8778			7 - 13 - 25
			210	0.74	31	6552		8686		9774		10393			12 - 18 - 29
8	M13	4	25	0.14	15	4320	0.30	5277	1.20	5663	2.70	5808	4.80	6.1	0 - 1 - 4
			40	0.36	20	5520		7121		7665		7961			1 - 2 - 10
			55	0.67	25	6249		8347		9120		9509			2 - 5 - 16
	M17	5	40	0.18	19	4377		5499		5910		6102		4.8	1 - 2 - 7
			60	0.4	24	5044		6722		7277		7600			2 - 4 - 14
			80	0.7	28	6339		8481		9333		9811			3 - 7 - 19
	M23	8	80	0.22	24	4247		5671		6190		6455		3.9	2 - 5 - 16
			120	0.49	29	6267		8448		9390		10043			5 - 12 - 25
			140	0.67	31	6659		9111		10341		11154			8 - 15- 28
	M31	10*	145	0.2	24	4878		6524		7170		7503		2.6	4 - 8 - 21
			215	0.45	29	6798		9266		10456		11252			8 - 16 - 29
			260	0.66	34	7350		10275		11772		12752			14 - 20 - 32
10	M13	5	35	0.17	16	5417	0.40	6897	1.50	7512	3.40	7769	6.00	6.1	1 - 1 - 5
			50	0.35	21	6333		8397		9210		9643			1 - 3 - 12
			70	0.69	25	7047		9762		10929		11521			2 - 5 - 18
	M17	6	55	0.22	21	5289		6971		7607		7933		4.8	1 - 2 - 9
			80	0.46	26	5928		8027		8963		9453			2 - 5 - 17
			100	0.71	29	6852		9769		11003		11699			4 - 9 - 22
	M23	8	100	0.23	25	4764		6534		7307		7705		3.9	3 - 6 - 18
			150	0.51	31	6618		9685		11037		11971			6 - 13 - 28
			180	0.73	33	7158		10452		12257		13446			10 - 17 - 32
	M31	10*	180	0.22	26	5285		7475		8395		8874		2.6	4 - 9 - 23
			240	0.39	31	6861		10040		11443		12410			7 - 15 - 30
			300	0.61	40	7552		11039		13005		14304			11 - 19 - 34

Note: Reference page U29 for operational conditions used for performance notes

CBE2-24 / 2-PIPE COOLING

Nominal Length ft	Nozzle Size	Primary Air			Sound	Coil Sensible Cooling (Btu/h)								Induction ratio	Throw
		Inlet Dia.	Flow Rate	Inlet ΔPS		1.0 GPM		1.5 GPM		2.0 GPM		2.5 GPM			
		Inches	CFM	(in. H2O)	NC	qTOTAL	ΔCOIL	qTOTAL	ΔCOIL	qTOTAL	ΔCOIL	qTOTAL	ΔCOIL		
4	M13	4	15	0.20	15	1447	3.80	1506	8.60	1552	1.90	1569	3.00	6.1	0 - 1 - 4
			20	0.35	17	1862		1952		2023		2053			1 - 2 - 7
			25	0.55	20	2170		2286		2355		2398			1 - 3 - 10
	M17	4	20	0.18	16	1514		1583		1640		1660		4.8	1 - 1 - 5
			30	0.40	21	2057		2164		2232		2271			1 - 3 - 10
			40	0.71	25	2624		2782		2906		2971			2 - 5 - 14
	M23	5	40	0.21	20	1816		8.6		1973		2011		3.9	2 - 4 - 12
			60	0.48	26	2686		2872		3023		3104			4 - 8 - 18
			75	0.75	29	3273		3538		3690		3808			7 - 12 - 21
	M31	6	70	0.18	20	2051		2171		2250		2296		2.6	2 - 6 - 14
			105	0.41	25	3036		3265		3420		3518			6 - 11 - 20
			140	0.74	31	3763		4087		4253		4406			10 - 14 - 23
6	M13	4	20	0.15	15	2054	5.50	2181	1.60	2188	2.80	2219	4.40	6.1	0 - 1 - 4
			30	0.34	18	2621		2783		2872		2931			1 - 2 - 9
			40	0.61	22	3278		3537		3633		3728			2 - 4 - 13
	M17	5	30	0.17	17	2188		2315		2376		2417		4.8	1 - 2 - 6
			45	0.39	23	2968		3185		3263		3341			2 - 3 - 12
			60	0.69	26	3874		4201		4367		4502			3 - 6 - 17
	M23	6	60	0.21	22	2633		2844		2923		3000		3.9	2 - 5 - 14
			90	0.48	27	4031		4383		4623		4797			5 - 10 - 21
			110	0.71	30	4505		4909		5221		5448			8 - 14 - 26
	M31	8	105	0.19	21	2968		3217		3321		3416		2.6	3 - 7 - 18
			160	0.43	27	4438		4827		5114		5321			7 - 13 - 25
			210	0.74	31	5060		5694		6055		6356			12 - 18 - 29
8	M13	4	25	0.14	15	3074	7.20	3299	2.10	3384	3.70	3442	5.70	6.1	0 - 1 - 4
			40	0.36	20	4148		4466		4638		4760			1 - 2 - 10
			55	0.67	25	4863		5313		5540		5731			2 - 5 - 16
	M17	5	40	0.18	19	3203		3443		3555		3633		4.8	1 - 2 - 7
			60	0.40	24	3916		4239		4428		4566			2 - 4 - 14
			80	0.70	28	4941		5437		5716		5943			3 - 7 - 19
	M23	8	80	0.22	24	3304		3606		3761		3889		3.9	2 - 5 - 16
			120	0.49	29	4922		5470		5851		6130			5 - 12 - 25
			140	0.67	31	5308		6024		6496		6844			9 - 16 - 30
	M31	10*	145	0.20	24	3801		4177		4371		4537		2.6	4 - 8 - 21
			215	0.45	29	5398		6091		6555		6893			8 - 16 - 29
			260	0.66	34	5986		6858		7429		7871			14 - 21 - 33
10	M13	5	35	0.17	16	4018	8.90	4376	2.60	4526	4.60	4632	7.10	6.1	1 - 1 - 5
			50	0.35	21	4892		5366		5618		5796			1 - 3 - 12
			70	0.69	25	5687		6367		6712		6997			2 - 5 - 18
	M17	6	55	0.22	21	4061		4432		4621		4755		4.8	1 - 2 - 9
			80	0.46	26	4676		5222		5507		5728			2 - 5 - 17
			100	0.71	29	5691		6410		6815		7143			4 - 9 - 22
	M23	8	100	0.23	25	3807		4257		4488		4674		3.9	3 - 6 - 18
			150	0.51	31	5642		6430		6974		7372			6 - 13 - 28
			180	0.73	33	6000		7141		7833		8346			10 - 18 - 33
	M31	10*	180	0.22	26	4354		4891		5170		5405		2.6	4 - 9 - 23
			240	0.39	31	5849		6666		7230		7643			7 - 15 - 30
			300	0.61	40	6000		7576		8333		8894			11 - 19 - 34

Note: Reference page U29 for operational conditions used for performance notes

CBE2-24 / 2-PIPE HEATING

Nominal Length ft	Nozzle Size	Primary Air			Sound	Coil Heating (Btu/h)								Induction ratio	Throw
		Inlet Dia.	Flow Rate	Inlet ΔPS		1.0 GPM		2.0 GPM		3.0 GPM		4.0 GPM			
		Inches	CFM	(in. H2O)	NC	qTOTAL	ΔCOIL	qTOTAL	ΔCOIL	qTOTAL	ΔCOIL	qTOTAL	ΔCOIL		
4	M13	4	15	0.2	15	3308	1.00	3900	3.80	4059	8.60	4181	1.90	6.1	0-1-4
			20	0.35	17	4179		5016		5259		5452			1-2-7
			25	0.55	20	4804		5848		6159		6347			1-3-10
	M17	4	20	0.18	16	3442		4079		4264		4418		4.8	1-1-5
			30	0.4	21	4561		5543		5832		6014			1-3-10
			40	0.71	25	5572		7069		7497		7831			2-5-14
	M23	5	40	0.21	20	4000		4894		5172		5316		3.9	2-4-12
			60	0.48	26	5639		7237		7739		8144			4-8-18
			75	0.75	29	7064		8819		9533		9942			7-12-21
	M31	6	70	0.18	20	4437		5526		5850		6062		2.6	2-6-14
			105	0.41	25	6492		8181		8799		9214			6-11-20
			140	0.74	31	7859		10139		11012		11459			10-14-23
6	M13	4	20	0.15	15	4561	1.40	5535	5.50	5876	1.60	5894	2.80	6.1	0-1-4
			30	0.34	18	5628		7063		7500		7740			1-2-9
			40	0.61	22	6907		8832		9530		9789			2-4-13
	M17	5	30	0.17	17	4765		5896		6238		6402		4.8	1-2-6
			45	0.39	23	6310		7998		8582		8791			2-3-12
			60	0.69	26	8041		10438		11321		11766			3-6-17
	M23	6	60	0.21	22	5539		7095		7664		7876		3.9	2-5-14
			90	0.48	27	8227		10862		11809		12458			5-10-21
			110	0.71	30	9016		12139		13228		14068			8-13-24
	M31	10*	105	0.19	21	6197		7997		8667		8948		2.6	3-7-18
			160	0.43	27	8953		11958		13007		13780			7-13-25
			210	0.74	31	10284		13635		15343		16314			12-18-29
8	M13	4	25	0.14	15	6781	1.80	8283	7.20	8889	2.10	9117	3.70	6.1	0-1-4
			40	0.36	20	8665		11178		12033		12497			1-2-10
			55	0.67	25	9810		13102		14315		14927			2-5-16
	M17	5	40	0.18	19	6870		8631		9278		9579		4.8	1-2-7
			60	0.4	24	7918		10551		11422		11931			2-4-14
			80	0.7	28	9950		13312		14651		15401			3-7-19
	M23	8	80	0.22	24	6667		8902		9716		10133		3.9	2-5-16
			120	0.49	29	9637		13261		14739		15764			5-12-25
			140	0.67	31	10453		14302		16233		17509			8-15-28
	M31	10*	145	0.2	24	7657		10241		11254		11777		2.6	4-8-21
			215	0.45	29	10671		14545		16413		17662			8-16-29
			260	0.66	34	11538		16129		18479		20017			14-20-32
10	M13	5	35	0.17	16	8504	2.20	10826	8.90	11792	2.60	12195	4.60	6.1	1-1-5
			50	0.35	21	9941		13182		14458		15137			1-3-12
			70	0.69	25	11062		15324		17155		18084			2-5-18
	M17	6	55	0.22	21	8302		10943		11941		12452		4.8	1-2-9
			80	0.46	26	9306		12599		14070		14839			2-5-17
			100	0.71	29	10756		15334		17272		18363			4-9-22
	M23	8	100	0.23	25	7479		10257		11470		12094		3.9	3-6-18
			150	0.51	31	10389		15202		17326		18791			6-13-28
			180	0.73	33	11235		16406		19240		21107			9-17-32
	M31	10*	180	0.22	26	8295		11733		13178		13930		2.6	4-9-23
			240	0.39	31	10770		15760		17962		19481			7-15-30
			300	0.61	40	11854		17329		20414		22453			11-19-34

Note: Reference page U29 for operational conditions used for performance notes

CBE2-12 / 4-PIPE COOLING

Nominal Length ft	Nozzle Size	Primary Air			Sound	Coil Sensible Cooling (Btu/h)								Induction ratio	Throw
		Inlet Dia.	Flow Rate	Inlet ΔPS		1.0 GPM		1.5 GPM		2.0 GPM		2.5 GPM			
		Inches	CFM	(in. H2O)	NC	qTOTAL	ΔCOIL	qTOTAL	ΔCOIL	qTOTAL	ΔCOIL	qTOTAL	ΔCOIL		
4	M13	5	15	0.24	15	842	0.70	853	1.60	864	2.90	870	4.50	3.4	2-3-5
			20	0.42	18	1048		1070		1087		1096			2-3-5
			25	0.65	21	1238		1271		1296		1309			3-4-6
	M17	5	25	0.27	15	1143		1171		1191		1203		2.3	3-3-6
			35	0.53	20	1450		1499		1534		1553			3-4-7
			40	0.7	21	1582		1644		1686		1709			4-6-8
	M23	5	40	0.21	16	1195		1226		1248		1260		1.9	4-5-7
			60	0.47	22	1583		1643		1685		1708			5-7-9
			75	0.73	25	1830		1916		1974		2006			6-7-10
	M31	6	75	0.24	20	1394		1428		1454		1469		1.3	5-6-8
			100	0.42	23	1708		1765		1805		1827			6-8-11
			130	0.71	28	2034		2121		2181		2213			7-8-11
6	M13	5	20	0.19	16	1156	1.00	1174	2.30	1191	4.20	1199	6.50	3.4	2-3-5
			30	0.42	21	1546		1591		1623		1641			3-5-8
			40	0.75	25	1906		1979		2029		2057			4-5-7
	M17	5	40	0.31	19	1766		1826		1868		1892		2.3	3-5-8
			50	0.49	22	2050		2139		2199		2232			4-6-9
			60	0.71	25	2312		2431		2510		2552			5-7-10
	M23	6	60	0.21	20	1766		1825		1866		1890		1.9	4-6-10
			85	0.42	24	2235		2342		2413		2452			6-8-11
			110	0.7	27	2628		2785		2890		2946			7-10-12
	M31	8	110	0.22	22	2020		2085		2132		2158		1.3	6-8-12
			150	0.42	26	2498		2610		2685		2726			7-10-13
			190	0.67	29	2910		3070		3178		3235			9-11-14
8	M13	5	30	0.24	19	1800	1.40	1848	3.00	1883	5.40	1901	8.50	3.4	3-4-8
			40	0.43	23	2204		2288		2343		2374			3-5-9
			50	0.67	26	2599		2718		2795		2838			4-6-9
	M17	6	50	0.28	21	2419		2521		2588		2625		2.3	4-6-8
			65	0.48	24	2886		3041		3141		3196			5-7-10
			80	0.72	27	3301		3511		3647		3722			6-8-11
	M23	8	80	0.22	22	2507		2617		2689		2728		1.9	5-7-10
			110	0.42	26	3093		3273		3390		3454			7-9-13
			140	0.67	30	3584		3839		4003		4094			8-10-14
	M31	10	140	0.22	25	2533		2637		2705		2743		1.3	7-9-13
			195	0.42	29	3174		3349		3463		3525			8-10-15
			250	0.69	34	3710		3962		4125		4214			10-12-17
10	M13	5	35	0.22	21	2815	1.70	2941	3.80	3022	6.70	3067	10.50	3.4	4-5-9
			50	0.45	25	3603		3821		3960		4037			4-6-10
			60	0.64	27	4045		4329		4512		4612			5-7-11
	M17	6	60	0.27	22	3804		4052		4211		4298		2.3	4-6-9
			80	0.49	26	4528		4899		5137		5270			5-8-11
			95	0.69	28	4986		5452		5751		5919			6-9-12
	M23	8	95	0.22	25	3970		4243		4418		4514		1.9	5-8-11
			135	0.44	29	4880		5322		5605		5764			7-9-12
			170	0.69	32	5500		6091		6473		6687			8-10-15
	M31	10	170	0.23	28	3784		4029		4186		4272		1.3	7-9-13
			230	0.41	32	4544		4919		5159		5292			8-11-16
			290	0.66	40	5162		5670		5997		6180			11-13-18

Note: Reference page U29 for operational conditions used for performance notes

Redefine your comfort zone. ™ | www.titus-hvac.com

CBE2-12 / 4-PIPE HEATING

Nominal Length ft	Nozzle Size	Primary Air			Sound	Coil Sensible Heating (Btu/h)								Induction ratio	Throw
		Inlet Dia.	Flow Rate	Inlet ΔPS		0.5 GPM		1.0 GPM		1.5 GPM		2.0 GPM			
		Inches	CFM	(in. H2O)	NC	qTOTAL	ΔCOIL	qTOTAL	ΔCOIL	qTOTAL	ΔCOIL	qTOTAL	ΔCOIL		
4	M13	5	15	0.24	15	1500	0.10	1599	0.20	1620	0.50	1639	1.00	3.4	2-3-5
			20	0.42	18	1844		1997		2037		2068			2-3-5
			25	0.65	21	2158		2367		2427		2471			3-4-6
	M17	5	25	0.27	15	2018		2197		2246		2283		2.3	3-3-6
			35	0.53	20	2517		2804		2893		2955			3-4-7
			40	0.70	21	2727		3069		3180		3256			4-6-8
	M23	5	40	0.21	16	2178		2372		2426		2467		1.9	4-5-7
			60	0.47	22	2840		3178		3288		3363			5-7-9
			75	0.73	25	3259		3706		3860		3966			6-7-10
	M31	6	75	0.24	20	2695		2919		2982		3028		1.3	5-6-8
			100	0.42	23	3285		3621		3724		3796			6-8-11
			130	0.71	28	3902		4372		4529		4637			7-8-11
6	M13	5	20	0.19	16	2041	0.10	2192	0.30	2226	0.80	2255	1.40	3.4	2-3-5
			30	0.42	21	2666		2950		3030		3089			3-5-8
			40	0.75	25	3232		3652		3784		3874			4-5-7
	M17	5	40	0.31	19	3037		3401		3508		3585		2.3	3-5-8
			50	0.49	22	3477		3966		4127		4235			4-6-9
			60	0.71	25	3878		4494		4707		4849			5-7-10
	M23	6	60	0.21	20	3150		3509		3615		3690		1.9	4-6-10
			85	0.42	24	3924		4491		4684		4811			6-8-11
			110	0.70	27	4557		5335		5617		5806			7-10-12
	M31	8	110	0.22	22	3835		4239		4356		4441		1.3	6-8-12
			150	0.42	26	4709		5317		5519		5654			7-10-13
			190	0.67	29	5460		6276		6566		6759			9-11-14
8	M13	5	30	0.24	19	3093	0.10	3407	0.50	3494	1.00	3557	1.80	3.4	3-4-8
			40	0.43	23	3709		4190		4341		4441			3-5-9
			50	0.67	26	4308		4957		5171		5310			4-6-9
	M17	6	50	0.28	21	4062		4632		4816		4936		2.3	4-6-8
			65	0.48	24	4752		5556		5834		6016			5-7-10
			80	0.72	27	5348		6385		6764		7009			6-8-11
	M23	8	80	0.22	22	4348		4954		5152		5281		1.9	5-7-10
			110	0.42	26	5257		6172		6497		6709			7-9-13
			140	0.67	30	6005		7220		7681		7976			8-10-14
	M31	10	140	0.22	25	4741		5326		5513		5636		1.3	7-9-13
			195	0.42	29	5877		6780		7095		7300			8-10-15
			250	0.69	34	6829		8045		8499		8792			10-12-17
10	M13	5	35	0.22	21	4572	0.10	5265	0.60	5491	1.30	5638	2.30	3.4	4-5-9
			50	0.45	25	5662		6766		7159		7411			4-6-10
			60	0.64	27	6239		7618		8130		8459			5-7-11
	M17	6	60	0.27	22	5954		7183		7630		7917		2.3	4-6-9
			80	0.49	26	6883		8596		9266		9695			5-8-11
			95	0.69	28	7448		9503		10344		10884			6-9-12
	M23	8	95	0.22	25	6340		7672		8164		8479		1.9	5-8-11
			135	0.44	29	7559		9530		10326		10837			7-9-12
			170	0.69	32	8361		10837		11903		12591			8-10-15
	M31	10	170	0.23	28	6527		7743		8185		8468		1.3	7-9-13
			230	0.41	32	7715		9439		10114		10547			8-11-16
			290	0.66	40	8683		10879		11795		12384			11-13-18

Note: Reference page U29 for operational conditions used for performance notes

CBE2-12 / 2-PIPE COOLING

Nominal Length ft	Nozzle Size	Primary Air			Sound	Coil Sensible Cooling (Btu/h)								Induction ratio	Throw
		Inlet Dia.	Flow Rate	Inlet ΔPS		1.0 GPM		1.5 GPM		2.0 GPM		2.5 GPM			
		Inches	CFM	(in. H2O)	NC	qTOTAL	ΔCOIL	qTOTAL	ΔCOIL	qTOTAL	ΔCOIL	qTOTAL	ΔCOIL		
4	M13	5	15	0.24	15	884	1.00	896	2.20	907	3.80	913	6.00	3.4	2-3-5
			20	0.42	18	1100		1123		1141		1151			2-3-5
			25	0.65	21	1300		1335		1360		1375			3-4-6
	M17	5	25	0.27	15	1200		1229		1251		1263		2.3	3-3-6
			35	0.53	20	1522		1574		1610		1631			3-4-7
			40	0.70	21	1661		1726		1770		1795			4-6-8
	M23	5	40	0.21	16	1255		1287		1310		1323		1.9	4-5-7
			60	0.47	22	1662		1725		1769		1793			5-7-9
			75	0.73	25	1922		2011		2073		2106			6-7-10
	M31	6	75	0.24	20	1463		1500		1527		1542		1.3	5-6-8
			100	0.42	23	1793		1853		1895		1919			6-8-11
			130	0.71	28	2135		2227		2290		2324			7-8-11
6	M13	5	20	0.19	16	1213	1.40	1233	3.10	1250	5.50	1258	8.70	3.4	2-3-5
			30	0.42	21	1623		1670		1704		1723			3-5-8
			40	0.75	25	2001		2077		2130		2159			4-5-7
	M17	5	40	0.31	19	1854		1917		1961		1986		2.3	3-5-8
			50	0.49	22	2152		2245		2308		2343			4-6-9
			60	0.71	25	2427		2562		2635		2680			5-7-10
	M23	6	60	0.21	20	1854		1916		1960		1984		1.9	4-6-10
			85	0.42	24	2347		2459		2534		2575			6-8-11
			110	0.70	27	2760		2924		3034		3093			7-10-12
	M31	8	110	0.22	22	2121		2190		2239		2266		1.3	6-8-12
			150	0.42	26	2623		2740		2819		2863			7-10-13
			190	0.67	29	3055		3223		3336		3397			9-11-14
8	M13	5	30	0.24	19	1889	1.80	1940	4.10	1977	7.30	1996	2.70	3.4	3-4-8
			40	0.43	23	2314		2402		2460		2492			3-5-9
			50	0.67	26	2729		2854		2935		2979			4-6-9
	M17	6	50	0.28	21	2540		2647		2717		2756		2.3	4-6-8
			65	0.48	24	3030		3193		3298		3356			5-7-10
			80	0.72	27	3466		3687		3829		3907			6-8-11
	M23	8	80	0.22	22	2633		2748		2823		2864		1.9	5-7-10
			110	0.42	26	3247		3436		3559		3626			7-9-13
			140	0.67	30	3762		4031		4203		4298			8-10-14
	M31	10	140	0.22	25	2659		2769		2840		2880		1.3	7-9-13
			195	0.42	29	3332		3516		3635		3700			8-10-15
			250	0.69	34	3896		4160		4330		4424			10-12-17
10	M13	5	35	0.22	21	2956	2.20	3088	5.00	3173	8.90	3220	3.70	3.4	4-5-9
			50	0.45	25	3782		4012		4158		4238			4-6-10
			60	0.64	27	4247		4545		4737		4842			5-7-11
	M17	6	60	0.27	22	3994		4254		4421		4513		2.3	4-6-9
			80	0.49	26	4754		5143		5394		5533			5-8-11
			95	0.69	28	5234		5724		6038		6215			6-9-12
	M23	8	95	0.22	25	4168		4454		4638		4739		1.9	5-8-11
			135	0.44	29	5124		5587		5885		6051			7-9-12
			170	0.69	32	5774		6395		6796		7021			8-10-15
	M31	10	170	0.23	28	3973		4230		4395		4485		1.3	7-9-13
			230	0.41	32	4771		5164		5416		5556			8-11-16
			290	0.66	40	5420		5953		6296		6488			11-13-18

Note: Reference page U29 for operational conditions used for performance notes

CBE2-12 / 2-PIPE HEATING

Nominal Length ft	Nozzle Size	Primary Air			Sound	Coil Sensible Heating (Btu/h)								Induction ratio	Throw
		Inlet Dia.	Flow Rate	Inlet ΔPS		0.5 GPM		1.0 GPM		1.5 GPM		2.0 GPM			
		Inches	CFM	(in. H2O)	NC	qTOTAL	ΔCOIL	qTOTAL	ΔCOIL	qTOTAL	ΔCOIL	qTOTAL	ΔCOIL		
4	M13	5	15	0.24	15	2417	0.20	2580	1.00	2613	2.20	2646	3.80	3.4	2-3-5
			20	0.42	18	2966		3218		3282		3334			2-3-5
			25	0.65	21	3465		3810		3908		3981			3-4-6
	M17	5	25	0.27	15	3234		3629		3609		3670		2.3	3-3-6
			35	0.53	20	4020		4493		4639		4741			3-4-7
			40	0.70	21	4349		4912		5096		5220			4-6-8
	M23	5	40	0.21	16	3445		3764		3854		3921		1.9	4-5-7
			60	0.47	22	4466		5022		5202		5325			5-7-9
			75	0.73	25	5101		5839		6092		6266			6-7-10
	M31	6	75	0.24	20	4174		4543		4646		4722		1.3	5-6-8
			100	0.42	23	5057		5610		5780		5898			6-8-11
			130	0.71	28	5968		6741		7001		7177			7-8-11
6	M13	5	20	0.19	16	3290	0.30	3638	1.40	3594	3.10	3642	5.50	3.4	2-3-5
			30	0.42	21	4284		4751		4883		4980			3-5-8
			40	0.75	25	5180		5872		6088		6238			4-5-7
	M17	5	40	0.31	19	4859		5458		5635		5761		2.3	3-5-8
			50	0.49	22	5549		6353		6618		6796			4-6-9
			60	0.71	25	6174		7187		7539		7773			5-7-10
	M23	6	60	0.21	20	4975		5567		5740		5864		1.9	4-6-10
			85	0.42	24	6161		7095		7412		7623			6-8-11
			110	0.70	27	7116		8397		8861		9172			7-10-12
	M31	8	110	0.22	22	5928		6592		6786		6924		1.3	6-8-12
			150	0.42	26	7227		8227		8560		8782			7-10-13
			190	0.57	29	8321		9665		10142		10461			9-11-14
8	M13	5	30	0.24	19	4986	0.50	5503	1.80	5647	4.10	5749	7.30	3.4	3-4-8
			40	0.43	23	5966		6758		7005		7171			3-5-9
			50	0.67	26	6916		7984		8337		8567			4-6-9
	M17	6	50	0.28	21	6512		7450		7753		7951		2.3	4-6-8
			65	0.48	24	7595		8918		9377		9675			5-7-10
			80	0.72	27	8523		10231		10854		11258			6-8-11
	M23	8	80	0.22	22	6877		7875		8201		8413		1.9	5-7-10
			110	0.42	26	8269		9775		10310		10658			7-9-13
			140	0.67	30	9395		11394		12153		12640			8-10-14
	M31	10	140	0.22	25	7315		8277		8585		8788		1.3	7-9-13
			196	0.42	29	8992		10477		10996		11334			8-10-15
			250	0.69	34	10365		12367		13115		13596			10-12-17
10	M13	5	35	0.22	21	7403	0.60	8545	2.20	8917	5.00	9159	8.90	3.4	4-5-9
			50	0.45	25	9146		10963		11610		12024			4-6-10
			60	0.64	27	10061		12331		13173		13714			5-7-11
	M17	6	60	0.27	22	9591		11614		12350		12822		2.3	4-6-9
			80	0.49	26	11051		13871		14972		15679			5-8-11
			95	0.69	28	11927		15310		16695		17583			6-9-12
	M23	8	95	0.22	25	10104		12297		13106		13625		1.9	5-8-11
			135	0.44	29	11970		15215		16526		17366			7-9-12
			170	0.69	32	13168		17243		18998		20130			8-10-15
	M31	10	170	0.23	28	10149		12151		12878		13344		1.3	7-9-13
			230	0.41	32	11894		14733		15844		16557			8-11-16
			290	0.66	40	13277		16893		18401		19369			11-13-18

Note: Reference page U29 for operational conditions used for performance notes

NOTES:

1. All performance data based on test performed in accordance with ASHRAE Standard 200-2018.
2. ΔP_s values are measured in inches of water
3. NC values are based on room absorption of 10 dB. A dash (-) indicates an NC value less than 15.
4. Throw values are based on isothermal supply air and represent throw distances to terminal velocities of 150, 100 and 50 fpm respectively
5. ΔP_{Coil} values are measured in feet of water. ΔP_{Coil} values in shaded cells indicate use of a two circuit coil. All other values represent a single circuit coil.
6. Induction ratio is multiplied by the volume flow rate of primary air to estimate the volume flow rate of room air entrained through the coil
7. * denotes oval inlet air connection.

Cooling performance:

- Cooling capacity listed (qTOTAL) is the total sensible heat removal by the beam's integral coil. It does not include any contribution or offset by the primary air.

- Capacity is based on 18°F ΔT between the induced air and the chilled water supply. Table 1 provides correction factors for other temperature differentials.

- Primary air sensible cooling contribution can be calculated by the following equation:

$$q_{SENSPA} = 1.085 \times CFM_{PA} \times (T_{ROOM} - T_{PA})$$

- Primary air latent cooling can be calculated by the following equation:

$$q_{LATENT} = 0.69 \times CFM_{PA} \times (W_{ROOM} - W_{PA})$$

where W_{ROOM} and W_{PA} are the humidity ratio of the room and primary air respectively expressed in Grains of moisture per pound dry air

TABLE 4: CORRECTION FOR (ΔT) BETWEEN ENTERING AIR AND ENTERING CHILLED WATER

Actual ΔT	10	12	14	16	**18**	20	22	24
Multiply Table Value by:	0.56	0.67	0.78	0.89	**1.00**	1.11	1.22	1.33

Heating performance:

- Heating capacity listed (qTOTAL) is the sensible heat removal by the beam's integral coil. It does not include any contribution or offset by the primary air

- Capacity is based on 50°F ΔT between the induced air and the chilled water supply. Table 2 provides correction factors for other temperature differentials.

- Primary air sensible heating offset (or contribution) can be calculated by the following equation:

$$q_{SENSPA} = 1.085 \times CFM_{PA} \times (T_{PA} - T_{ROOM})$$

if the primary air temperature is lower than that of the room, it will offset the coil's heating

if the primary air temperature is higher than that of the room, it will contribute to the coil's heating

TABLE 2: CORRECTION FOR (ΔT) BETWEEN ENTERING AIR AND ENTERING CHILLED WATER

Actual ΔT	20	30	40	50	60	70	80	90	100	110	120
Multiply Table Value by:	0.40	0.60	0.80	1.00	1.20	1.40	1.60	1.80	2.00	2.20	2.40

Legend:

ΔP_S = Unit Inlet Pressure [in wg]

qCoil = Sensible Capacity, Coil [Btu/h]

ΔCoil = Water coil pressure drop [ft wg]

q_{SENSPA} = Sensible Capacity, Primary Air [Btu/h]

CFM_{PA} = Air Flowrate, Primary Air [CFM]

T_{PA} = Temperature Primary Air [°F]

T_{ROOM} = Temperature Room Air [°F]

q_{SENSPA} = Latent Capacity, Primary Air [Btu/h]

CBLV–12

- Active linear chilled beam with 1-way or 2-way air distribution patterns
- Optimized nozzle design provides high capacity and low noise levels
- Linear design matching commercial architectural styling
- Designed to fit in standard 12-inch ceiling systems
- Vertical Coil configuration
- Optimized diffuser geometry maximizes occupant comfort

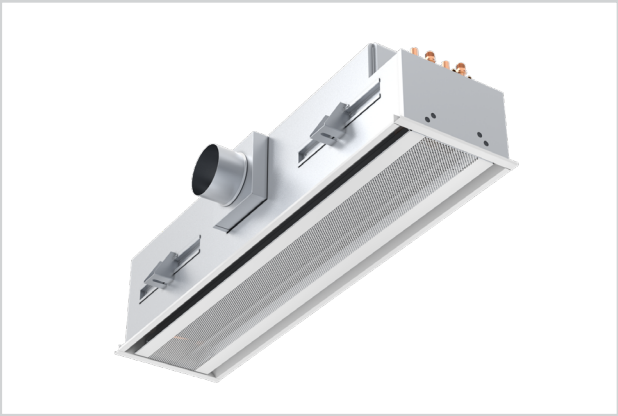

CBLV-12

dual-function | k-12 education | universities | energy solutions

See website for Specifications

MODEL:

CBLV-12

FINISHES:

Standard Finish - #26 White
Optional Finish - #84 Black

OVERVIEW

Titus active chilled beams features the aerodynamic properties of Titus ceiling diffusers and benefit from the use of using hydronic coils and induced air to reduce energy consumption associated with removal of sensible thermal loads. The primary air is supplied to the chilled beam subsequent to it being discharged through a series of nozzles located along the length of the beam. The nozzles inject the primary air into the mixing chamber at velocities capable of inducing room air through two coils and where it mixes with the primary supply air. This mixture of air is then discharged into the space through the ceiling slot diffusers. This provides high cooling outputs with low amounts of primary air. The reduced volume of air results in the reduction of the air handler capacity and size, smaller duct sizes, and the overall energy consumption.

The supplied air from the air handling unit is tempered and dehumidified to handle the latent load. The remaining loads in the space are addressed with the heat exchanger which is incorporated into the chilled beam. Applications with low latent cooling loads could use 100 percent outdoor air allowing for use of a dedicated outdoor air system with energy recovery further reducing total system energy consumption.

The CBLV-12's are offered for both cooling and heating, and lengths from 2 to 10 ft. They can be easily integrated into different grids styles within a suspended ceiling or even in drywall ceilings.

ADVANTAGES

- Removal of high thermal loads is possible in this air/water system
- The size of the air duct system is reduced to a minimum, due to the low supply of primary air
- Substantial reduction in the operating costs, due to low primary air volume
- Improvement of the thermal comfort inside the room
- Suitable for several standard ceiling grids
- Contributing sound levels below NC-30

CBLV-12 STANDARD FEATURES

- 1-way or 2-way air distribution patterns
- 2 foot to 10 foot lengths, 1 foot increments
- Perforated induced air grille
- Left hand or right hand coil connections
- Side or top air inlet locations
- 2-pipe and 4-pipe coil configurations
- Configured nozzle geometry for capacity optimization
- Hinged induced air grille for roomside coil access
- Commissioning port with roomside access for balancing
- Mounting brackets with adjustments in two directions
- Durable powder coat finish
- ½" Sweat water coil connections
- Coil air vent
- Condensate tray with drain connection for field plumbing

CBLV-12 2-Way

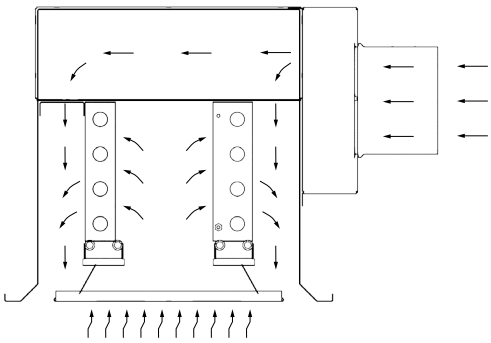

OPTIONS AND ACCESSORIES

- ½" thick foil-faced EcoShield, anti-microbial external insulation
- Coil drain valve
- ½" or ¾ MNPT water coil connections
- 12-inch, 18-inch or 24-inch stainless steel braided hoses
- Lay-in, narrow tee and drop face border types
- Coil lint screen
- Constant volume regulator

Redefine your comfort zone. ™ | www.titus-hvac.com

CBLV-12 UNIT DIMENSIONS

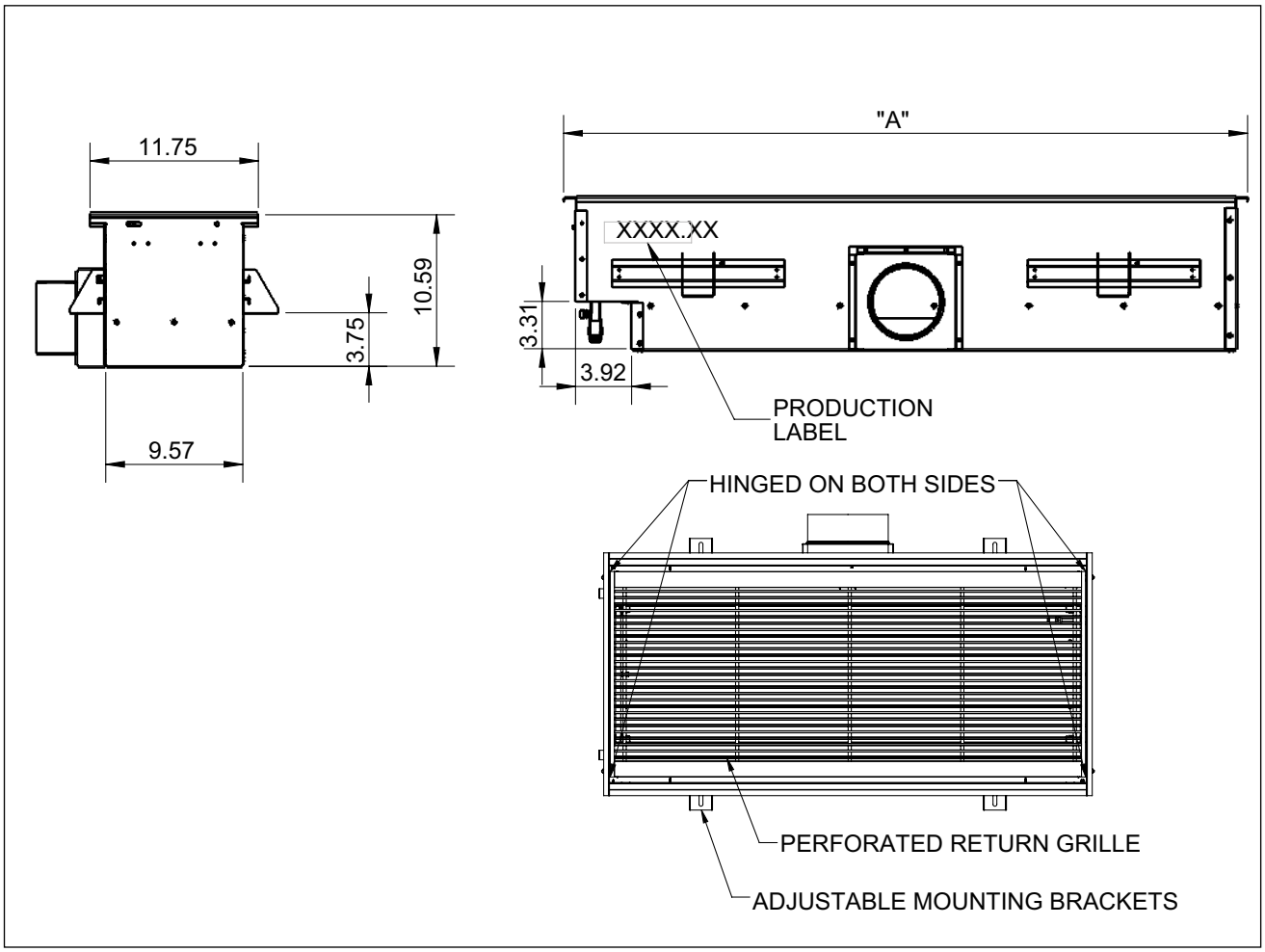

Nominal Unit Length (ft)	'A' (IN)
2	23¾
3	35¾
4	47¾
5	59¾
6	71¾
7	83¾
8	95¾
9	107¾
10	119¾

Nominal Unit Length (ft)	'B' (IN)	'C' (IN)*
4	3⅞	7
5	4⅞	5
6	5⅞	5
8	7⅞	5

*Side Inlet Only

Integrated ¼" pressure port for balancing/commissioning accessable from roomside opposite coil connection

All dimensions are in inches

CBLV-12 UNIT OPTION DETAILS

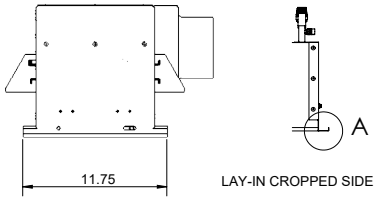

LAY-IN CROPPED SIDE VIEW

LAY-IN BORDER TYPE

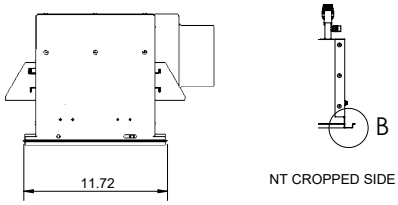

NT CROPPED SIDE VIEW

NT BORDER TYPE

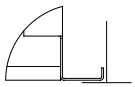

DETAIL A
SCALE 4 : 6

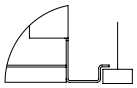

DETAIL B
SCALE 4 : 6

CBLV-12 INLET, DISCHARGE AND PIPING CONFIGURATION

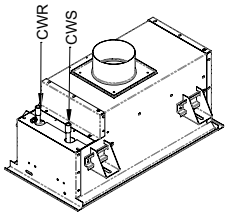

TOP INLET
1-WAY FRONT THROW
2-PIPE LEFT HAND COIL
OR
1-WAY BACK THROW
2-PIPE RIGHT HAND COIL

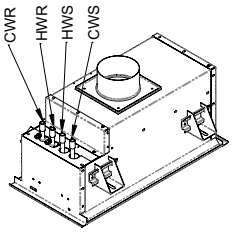

TOP INLET
1-WAY FRONT THROW
4-PIPE LEFT HAND COIL
OR
1-WAY BACK THROW
4-PIPE RIGHT HAND COIL

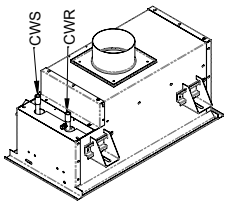

TOP INLET
1-WAY BACK THROW
2-PIPE LEFT HAND COIL
OR
1-WAY FRONT THROW
2-PIPE RIGHT HAND COIL

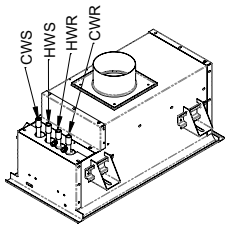

TOP INLET
1-WAY BACK THROW
4-PIPE LEFT HAND COIL
OR
1-WAY FRONT THROW
4-PIPE RIGHT HAND COIL

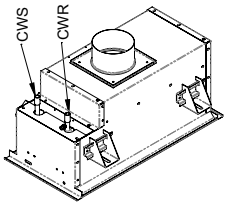

TOP INLET
2-WAY THROW
2-PIPE LEFT HAND COIL
OR
2-WAY THROW
2-PIPE RIGHT HAND COIL

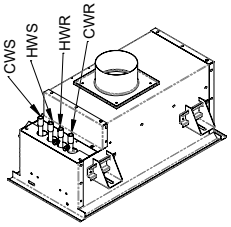

TOP INLET
2-WAY THROW
4-PIPE LEFT HAND COIL
OR
2-WAY THROW
4-PIPE RIGHT HAND COIL

CBLV-12 / 4-PIPE COOLING

Nominal Length ft	Nozzle Size	Primary Air			Sound	Coil Sensible Cooling (Btu/h)								Induction ratio	Throw
		Inlet Dia.	Flow Rate	Inlet ΔPS		1.0 GPM		1.5 GPM		2.0 GPM		2.5 GPM			
		Inches	CFM	(in. H2O)	NC	qTOTAL	ΔCOIL	qTOTAL	ΔCOIL	qTOTAL	ΔCOIL	qTOTAL	ΔCOIL		
4	M13	5	15	0.24	15	842	0.70	853	1.60	864	2.90	870	4.50	3.4	2-3-5
			20	0.42	18	1048		1070		1087		1096			2-3-5
			25	0.65	21	1238		1271		1296		1309			3-4-6
	M17	5	25	0.27	15	1143		1171		1191		1203		2.3	3-3-6
			35	0.53	20	1450		1499		1534		1553			3-4-7
			40	0.7	21	1582		1644		1686		1709			4-6-8
	M23	5	40	0.21	16	1195		1226		1248		1260		1.9	4-5-7
			60	0.47	22	1583		1643		1685		1708			5-7-9
			75	0.73	25	1830		1916		1974		2006			6-7-10
	M31	6	75	0.24	20	1394		1428		1454		1469		1.3	5-6-8
			100	0.42	23	1708		1765		1805		1827			6-8-11
			130	0.71	28	2034		2121		2181		2213			7-8-11
6	M13	5	20	0.19	16	1156	1.00	1174	2.30	1191	4.20	1199	6.50	3.4	2-3-5
			30	0.42	21	1546		1591		1623		1641			3-5-8
			40	0.75	25	1906		1979		2029		2057			4-5-7
	M17	5	40	0.31	19	1766		1826		1868		1892		2.3	3-5-8
			50	0.49	22	2050		2139		2199		2232			4-6-9
			60	0.71	25	2312		2431		2510		2552			5-7-10
	M23	6	60	0.21	20	1766		1825		1866		1890		1.9	4-6-10
			85	0.42	24	2235		2342		2413		2452			6-8-11
			110	0.7	27	2628		2785		2890		2946			7-10-12
	M31	8	110	0.22	22	2020		2085		2132		2158		1.3	6-8-12
			150	0.42	26	2498		2610		2685		2726			7-10-13
			190	0.67	29	2910		3070		3178		3235			9-11-14
8	M13	5	30	0.24	19	1800	1.40	1848	3.00	1883	5.40	1901	8.50	3.4	3-4-8
			40	0.43	23	2204		2288		2343		2374			3-5-9
			50	0.67	26	2599		2718		2795		2838			4-6-9
	M17	6	50	0.28	21	2419		2521		2588		2625		2.3	4-6-8
			65	0.48	24	2886		3041		3141		3196			5-7-10
			80	0.72	27	3301		3511		3647		3722			6-8-11
	M23	8	80	0.22	22	2507		2617		2689		2728		1.9	5-7-10
			110	0.42	26	3093		3273		3390		3454			7-9-13
			140	0.67	30	3584		3839		4003		4094			8-10-14
	M31	10	140	0.22	25	2533		2637		2705		2743		1.3	7-9-13
			195	0.42	29	3174		3349		3463		3525			8-10-15
			250	0.69	34	3710		3962		4125		4214			10-12-17
10	M13	5	35	0.22	21	2815	1.70	2941	3.80	3022	6.70	3067	10.50	3.4	4-5-9
			50	0.45	25	3603		3821		3960		4037			4-6-10
			60	0.64	27	4045		4329		4512		4612			5-7-11
	M17	6	60	0.27	22	3804		4052		4211		4298		2.3	4-6-9
			80	0.49	26	4528		4899		5137		5270			5-8-11
			95	0.69	28	4986		5452		5751		5919			6-9-12
	M23	8	95	0.22	25	3970		4243		4418		4514		1.9	5-8-11
			135	0.44	29	4880		5322		5605		5764			7-9-12
			170	0.69	32	5500		6091		6473		6687			8-10-15
	M31	10	170	0.23	28	3784		4029		4186		4272		1.3	7-9-13
			230	0.41	32	4544		4919		5159		5292			8-11-16
			290	0.66	40	5162		5670		5997		6180			11-13-18

Note: Reference page U38 for operational conditions used for performance notes

CBLV-12 / 4-PIPE HEATING

Nominal Length ft	Nozzle Size	Primary Air			Sound	Coil Sensible Heating (Btu/h)								Induction ratio	Throw
		Inlet Dia.	Flow Rate	Inlet ΔPS		0.5 GPM		1.0 GPM		1.5 GPM		2.0 GPM			
		Inches	CFM	(in. H2O)	NC	qTOTAL	ΔCOIL	qTOTAL	ΔCOIL	qTOTAL	ΔCOIL	qTOTAL	ΔCOIL		
4	M13	5	15	0.24	15	1500	0.10	1599	0.20	1620	0.50	1639	1.00	3.4	2-3-5
			20	0.42	18	1844		1997		2037		2068			2-3-5
			25	0.65	21	2158		2367		2427		2471			3-4-6
	M17	5	25	0.27	15	2018		2197		2246		2283		2.3	3-3-6
			35	0.53	20	2517		2804		2893		2955			3-4-7
			40	0.70	21	2727		3069		3180		3256			4-6-8
	M23	5	40	0.21	16	2178		2372		2426		2467		1.9	4-5-7
			60	0.47	22	2840		3178		3288		3363			5-7-9
			75	0.73	25	3259		3706		3860		3966			6-7-10
	M31	6	75	0.24	20	2695		2919		2982		3028		1.3	5-6-8
			100	0.42	23	3285		3621		3724		3796			6-8-11
			130	0.71	28	3902		4372		4529		4637			7-8-11
6	M13	5	20	0.19	16	2041	0.10	2192	0.30	2226	0.80	2255	1.40	3.4	2-3-5
			30	0.42	21	2666		2950		3030		3089			3-5-8
			40	0.75	25	3232		3652		3784		3874			4-5-7
	M17	5	40	0.31	19	3037		3401		3508		3585		2.3	3-5-8
			50	0.49	22	3477		3966		4127		4235			4-6-9
			60	0.71	25	3878		4494		4707		4849			5-7-10
	M23	6	60	0.21	20	3150		3509		3615		3690		1.9	4-6-10
			85	0.42	24	3924		4491		4684		4811			6-8-11
			110	0.70	27	4557		5335		5617		5806			7-10-12
	M31	8	110	0.22	22	3835		4239		4356		4441		1.3	6-8-12
			150	0.42	26	4709		5317		5519		5654			7-10-13
			190	0.67	29	5460		6276		6566		6759			9-11-14
8	M13	5	30	0.24	19	3093	0.10	3407	0.50	3494	1.00	3557	1.80	3.4	3-4-8
			40	0.43	23	3709		4190		4341		4441			3-5-9
			50	0.67	26	4308		4957		5171		5310			4-6-9
	M17	6	50	0.28	21	4062		4632		4816		4936		2.3	4-6-8
			65	0.48	24	4752		5556		5834		6016			5-7-10
			80	0.72	27	5348		6385		6764		7009			6-8-11
	M23	8	80	0.22	22	4348		4954		5152		5281		1.9	5-7-10
			110	0.42	26	5257		6172		6497		6709			7-9-13
			140	0.67	30	6005		7220		7681		7976			8-10-14
	M31	10	140	0.22	25	4741		5326		5513		5636		1.3	7-9-13
			195	0.42	29	5877		6780		7095		7300			8-10-15
			250	0.69	34	6829		8045		8499		8792			10-12-17
10	M13	5	35	0.22	21	4572	0.10	5265	0.60	5491	1.30	5638	2.30	3.4	4-5-9
			50	0.45	25	5662		6766		7159		7411			4-6-10
			60	0.64	27	6239		7618		8130		8459			5-7-11
	M17	6	60	0.27	22	5954		7183		7630		7917		2.3	4-6-9
			80	0.49	26	6883		8596		9266		9695			5-8-11
			95	0.69	28	7448		9503		10344		10884			6-9-12
	M23	8	95	0.22	25	6340		7672		8164		8479		1.9	5-8-11
			135	0.44	29	7559		9530		10326		10837			7-9-12
			170	0.69	32	8361		10837		11903		12591			8-10-15
	M31	10	170	0.23	28	6527		7743		8185		8468		1.3	7-9-13
			230	0.41	32	7715		9439		10114		10547			8-11-16
			290	0.66	40	8683		10879		11795		12384			11-13-18

Note: Reference page U38 for operational conditions used for performance notes

CBLV-12 / 2-PIPE COOLING

Nominal Length ft	Nozzle Size	Primary Air			Sound	Coil Sensible Cooling (Btu/h)								Induction ratio	Throw
		Inlet Dia.	Flow Rate	Inlet ΔPS		1.0 GPM		1.5 GPM		2.0 GPM		2.5 GPM			
		Inches	CFM	(in. H2O)	NC	qTOTAL	ΔCOIL	qTOTAL	ΔCOIL	qTOTAL	ΔCOIL	qTOTAL	ΔCOIL		
4	M13	5	15	0.24	15	884	1.00	896	2.20	907	3.80	913	6.00	3.4	2-3-5
			20	0.42	18	1100		1123		1141		1151			2-3-5
			25	0.65	21	1300		1335		1360		1375			3-4-6
	M17	5	25	0.27	15	1200		1229		1251		1263		2.3	3-3-6
			35	0.53	20	1522		1574		1610		1631			3-4-7
			40	0.70	21	1661		1726		1770		1795			4-6-8
	M23	5	40	0.21	16	1255		1287		1310		1323		1.9	4-5-7
			60	0.47	22	1662		1725		1769		1793			5-7-9
			75	0.73	25	1922		2011		2073		2106			6-7-10
	M31	6	75	0.24	20	1463		1500		1527		1542		1.3	5-6-8
			100	0.42	23	1793		1853		1895		1919			6-8-11
			130	0.71	28	2135		2227		2290		2324			7-8-11
6	M13	5	20	0.19	16	1213	1.40	1233	3.10	1250	5.50	1258	8.70	3.4	2-3-5
			30	0.42	21	1623		1670		1704		1723			3-5-8
			40	0.75	25	2001		2077		2130		2159			4-5-7
	M17	5	40	0.31	19	1854		1917		1961		1986		2.3	3-5-8
			50	0.49	22	2152		2245		2308		2343			4-6-9
			60	0.71	25	2427		2562		2635		2680			5-7-10
	M23	6	60	0.21	20	1854		1916		1960		1984		1.9	4-6-10
			85	0.42	24	2347		2459		2534		2575			6-8-11
			110	0.70	27	2760		2924		3034		3093			7-10-12
	M31	8	110	0.22	22	2121		2190		2239		2266		1.3	6-8-12
			150	0.42	26	2623		2740		2819		2863			7-10-13
			190	0.67	29	3055		3223		3336		3397			9-11-14
8	M13	5	30	0.24	19	1889	1.80	1940	4.10	1977	7.30	1996	2.70	3.4	3-4-8
			40	0.43	23	2314		2402		2460		2492			3-5-9
			50	0.67	26	2729		2854		2935		2979			4-6-9
	M17	6	50	0.28	21	2540		2647		2717		2756		2.3	4-6-8
			65	0.48	24	3030		3193		3298		3356			5-7-10
			80	0.72	27	3466		3687		3829		3907			6-8-11
	M23	8	80	0.22	22	2633		2748		2823		2864		1.9	5-7-10
			110	0.42	26	3247		3436		3559		3626			7-9-13
			140	0.67	30	3762		4031		4203		4298			8-10-14
	M31	10	140	0.22	25	2659		2769		2840		2880		1.3	7-9-13
			195	0.42	29	3332		3516		3635		3700			8-10-15
			250	0.69	34	3896		4160		4330		4424			10-12-17
10	M13	5	35	0.22	21	2956	2.20	3088	5.00	3173	8.90	3220	3.70	3.4	4-5-9
			50	0.45	25	3782		4012		4158		4238			4-6-10
			60	0.64	27	4247		4545		4737		4842			5-7-11
	M17	6	60	0.27	22	3994		4254		4421		4513		2.3	4-6-9
			80	0.49	26	4754		5143		5394		5533			5-8-11
			95	0.69	28	5234		5724		6038		6215			6-9-12
	M23	8	95	0.22	25	4168		4454		4638		4739		1.9	5-8-11
			135	0.44	29	5124		5587		5885		6051			7-9-12
			170	0.69	32	5774		6395		6796		7021			8-10-15
	M31	10	170	0.23	28	3973		4230		4395		4485		1.3	7-9-13
			230	0.41	32	4771		5164		5416		5556			8-11-16
			290	0.66	40	5420		5953		6296		6488			11-13-18

Note: Reference page U38 for operational conditions used for performance notes

CBLV-12 / 2-PIPE HEATING

Nominal Length ft	Nozzle Size	Primary Air			Sound	Coil Sensible Heating (Btu/h)								Induction ratio	Throw
		Inlet Dia.	Flow Rate	Inlet ΔPS		0.5 GPM		1.0 GPM		1.5 GPM		2.0 GPM			
		Inches	CFM	(in. H2O)	NC	qTOTAL	ΔCOIL	qTOTAL	ΔCOIL	qTOTAL	ΔCOIL	qTOTAL	ΔCOIL		
4	M13	5	15	0.24	15	2417	0.20	2580	1.00	2613	2.20	2646	3.80	3.4	2-3-5
			20	0.42	18	2966		3218		3282		3334			2-3-5
			25	0.65	21	3465		3810		3908		3981			3-4-6
	M17	5	25	0.27	15	3234		3629		3609		3670		2.3	3-3-6
			35	0.53	20	4020		4493		4639		4741			3-4-7
			40	0.70	21	4349		4912		5096		5220			4-6-8
	M23	5	40	0.21	16	3445		3764		3854		3921		1.9	4-5-7
			60	0.47	22	4466		5022		5202		5325			5-7-9
			75	0.73	25	5101		5839		6092		6266			6-7-10
	M31	6	75	0.24	20	4174		4543		4646		4722		1.3	5-6-8
			100	0.42	23	5057		5610		5780		5898			6-8-11
			130	0.71	28	5968		6741		7001		7177			7-8-11
6	M13	5	20	0.19	16	3290	0.30	3638	1.40	3594	3.10	3642	5.50	3.4	2-3-5
			30	0.42	21	4284		4751		4883		4980			3-5-8
			40	0.75	25	5180		5872		6088		6238			4-5-7
	M17	5	40	0.31	19	4859		5458		5635		5761		2.3	3-5-8
			50	0.49	22	5549		6353		6618		6796			4-6-9
			60	0.71	25	6174		7187		7539		7773			5-7-10
	M23	6	60	0.21	20	4975		5567		5740		5864		1.9	4-6-10
			85	0.42	24	6161		7095		7412		7623			6-8-11
			110	0.70	27	7116		8397		8861		9172			7-10-12
	M31	8	110	0.22	22	5928		6592		6786		6924		1.3	6-8-12
			150	0.42	26	7227		8227		8560		8782			7-10-13
			190	0.57	29	8321		9665		10142		10461			9-11-14
8	M13	5	30	0.24	19	4986	0.50	5503	1.80	5647	4.10	5749	7.30	3.4	3-4-8
			40	0.43	23	5966		6758		7005		7171			3-5-9
			50	0.67	26	6916		7984		8337		8567			4-6-9
	M17	6	50	0.28	21	6512		7450		7753		7951		2.3	4-6-8
			65	0.48	24	7595		8918		9377		9675			5-7-10
			80	0.72	27	8523		10231		10854		11258			6-8-11
	M23	8	80	0.22	22	6877		7875		8201		8413		1.9	5-7-10
			110	0.42	26	8269		9775		10310		10658			7-9-13
			140	0.67	30	9395		11394		12153		12640			8-10-14
	M31	10	140	0.22	25	7315		8277		8585		8788		1.3	7-9-13
			196	0.42	29	8992		10477		10996		11334			8-10-15
			250	0.69	34	10365		12367		13115		13596			10-12-17
10	M13	5	35	0.22	21	7403	0.60	8545	2.20	8917	5.00	9159	8.90	3.4	4-5-9
			50	0.45	25	9146		10963		11610		12024			4-6-10
			60	0.64	27	10061		12331		13173		13714			5-7-11
	M17	6	60	0.27	22	9591		11614		12350		12822		2.3	4-6-9
			80	0.49	26	11051		13871		14972		15679			5-8-11
			95	0.69	28	11927		15310		16695		17583			6-9-12
	M23	8	95	0.22	25	10104		12297		13106		13625		1.9	5-8-11
			135	0.44	29	11970		15215		16526		17366			7-9-12
			170	0.69	32	13168		17243		18998		20130			8-10-15
	M31	10	170	0.23	28	10149		12151		12878		13344		1.3	7-9-13
			230	0.41	32	11894		14733		15844		16557			8-11-16
			290	0.66	40	13277		16893		18401		19369			11-13-18

Note: Reference page U38 for operational conditions used for performance notes

NOTES:

1. All performance data based on test performed in accordance with ASHRAE Standard 200-2018.
2. ΔP_s values are measured in inches of water.
3. NC values are based on room absorption of 10 dB. A dash (-) indicates an NC value less than 15.
4. Throw values are based on isothermal supply air and represent throw distances to terminal velocities of 150, 100 and 50 fpm respectively
5. ΔP_{Coil} values are measured in feet of water. ΔP_{Coil} values in shaded cells indicate use of a two circuit coil. All other values represent a single circuit coil.
6. Induction ratio is multiplied by the volume flow rate of primary air to estimate the volume flow rate of room air entrained through the coil

Cooling performance:

- Cooling capacity listed (qTOTAL) is the total sensible heat removal by the beam's integral coil. It does not include any contribution or offset by the primary air.

- Capacity is based on 18°F ΔT between the induced air and the chilled water supply. Table 1 provides correction factors for other temperature differentials.

- Primary air sensible cooling contribution can be calculated by the following equation:

$$q_{SENSPA} = 1.085 \times CFM_{PA} \times (T_{ROOM} - T_{PA})$$

- Primary air latent cooling can be calculated by the following equation:

$$q_{LATENT} = 0.69 \times CFM_{PA} \times (W_{ROOM} - W_{PA})$$

where W_{ROOM} and W_{PA} are the humidity ratio of the room and primary air respectively expressed in Grains of moisture per pound dry air

TABLE 4: CORRECTION FOR (ΔT) BETWEEN ENTERING AIR AND ENTERING CHILLED WATER

Actual ΔT	10	12	14	16	**18**	20	22	24
Multiply Table Value by:	0.56	0.67	0.78	0.89	**1.00**	1.11	1.22	1.33

Heating performance:

- Heating capacity listed (qTOTAL) is the sensible heat removal by the beam's integral coil. It does not include any contribution or offset by the primary air

- Capacity is based on 50°F ΔT between the induced air and the chilled water supply. Table 2 provides correction factors for other temperature differentials.

- Primary air sensible heating offset (or contribution) can be calculated by the following equation:

$$q_{SENSPA} = 1.085 \times CFM_{PA} \times (T_{PA} - T_{ROOM})$$

if the primary air temperature is lower than that of the room, it will offset the coil's heating

if the primary air temperature is higher than that of the room, it will contribute to the coil's heating

TABLE 2: CORRECTION FOR (ΔT) BETWEEN ENTERING AIR AND ENTERING CHILLED WATER

Actual ΔT	20	30	40	**50**	60	70	80	90	100	110	120
Multiply Table Value by:	0.40	0.60	0.80	**1.00**	1.20	1.40	1.60	1.80	2.00	2.20	2.40

Legend:

ΔP_S = Unit Inlet Pressure [in wg]

qCoil = Sensible Capacity, Coil [Btu/h]

ΔCoil = Water coil pressure drop [ft wg]

q_{SENSPA} = Sensible Capacity, Primary Air [Btu/h]

CFM_{PA} = Air Flowrate, Primary Air [CFM]

T_{PA} = Temperature Primary Air [°F]

T_{ROOM} = Temperature Room Air [°F]

q_{SENSPA} = Latent Capacity, Primary Air [Btu/h]

Modular Active Chilled Beams

CBAM

- Active modular chilled beam with 4-way air distribution pattern
- Optimized nozzle design provides high capacity and low noise levels
- Modular design matching commercial architectural styling
- Designed to fit in standard 24 inch ceiling systems
- Optimized diffuser geometry maximizes occupant comfort

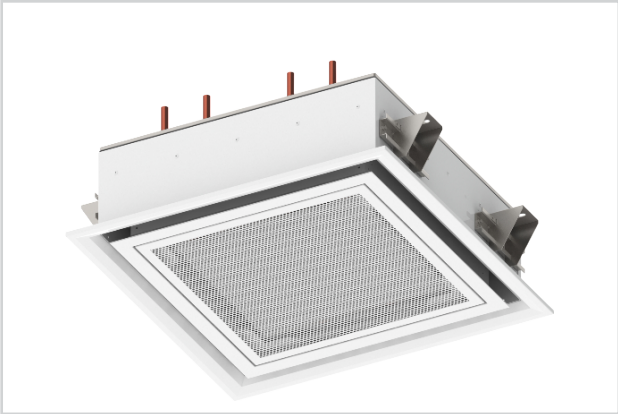

CBAM

dual-function | healthcare | k-12 education | universities | wood grains | energy solutions

See website for Specifications

MODEL:

CBAM: 24" x 24" / 48" x 24" module sizes

FINISHES:

Standard Finish - #26 White
Optional Finish - #84 Black

OVERVIEW

Titus active chilled beams features the aerodynamic properties of Titus ceiling diffusers and benefit from the use of using hydronic coils and induced air to reduce energy consumption associated with removal of sensible thermal loads. The primary air is supplied to the chilled beam subsequent to it being discharged through a series of nozzles located along the perimeter of the beam. The nozzles inject the primary air into the mixing chamber at velocities capable of inducing room air through the water coil and where it mixes with the primary supply air. This mixture of air is then discharged into the space through the ceiling slot diffusers. This provides high cooling outputs with low amounts of primary air. The reduced volume of air results in the reduction of the air handler capacity and size, smaller duct sizes, and the overall energy consumption.

The supplied air from the air handling unit is tempered and dehumidified to handle the latent load. The remaining loads in the space are addressed with the heat exchanger which is incorporated into the chilled beam. Applications with low latent cooling loads could use 100 percent outdoor air allowing for use of a dedicated outdoor air system with energy recovery further reducing total system energy consumption.

The CBAM's are offered for both, cooling and heating, and in 24" x 24" and 48" x 24" module sizes. They can be easily integrated into different grids styles within a suspended ceiling or even in drywall ceilings. The low overall height of the CBAM product line is ideal for reducing the space required for false ceiling in any application.

ADVANTAGES

- Removal of high thermal loads is possible in this air/water system
- The size of the air duct system is reduced to a minimum, due to the low supply of primary air
- Substantial reduction in the operating costs, due to low primary air volume
- Improvement of the thermal comfort inside the room
- Suitable for several standard ceiling grids
- Contributing sound levels below NC-30

CBAM STANDARD FEATURES

- 4-way way air distribution pattern
- 24-inch and 48 inch lengths
- 24-inch width
- Perforated induced air grille
- Top or side coil connections
- Top or side air inlet locations
- 2-pipe and 4-pipe coil configurations
- Configured nozzle geometry for capacity optimization
- Removable induced air grille for roomside coil access
- Commissioning port with roomside access for balancing
- Mounting brackets with adjustments in two directions
- Durable powder coat finish
- ½" Sweat water coil connections
- Coil air vent

OPTIONS AND ACCESSORIES

- ½" thick foil-faced EcoShield, anti-microbial external insulation
- Coil drain valve
- ½" or ¾ MNPT water coil connections
- 12-inch, 18-inch or 24-inch stainless steel braided hoses
- Lay-in, narrow tee and drop face border types
- Coil lint screen
- Constant volume regulator

CBAM UNIT DIMENSIONS / TOP INLET

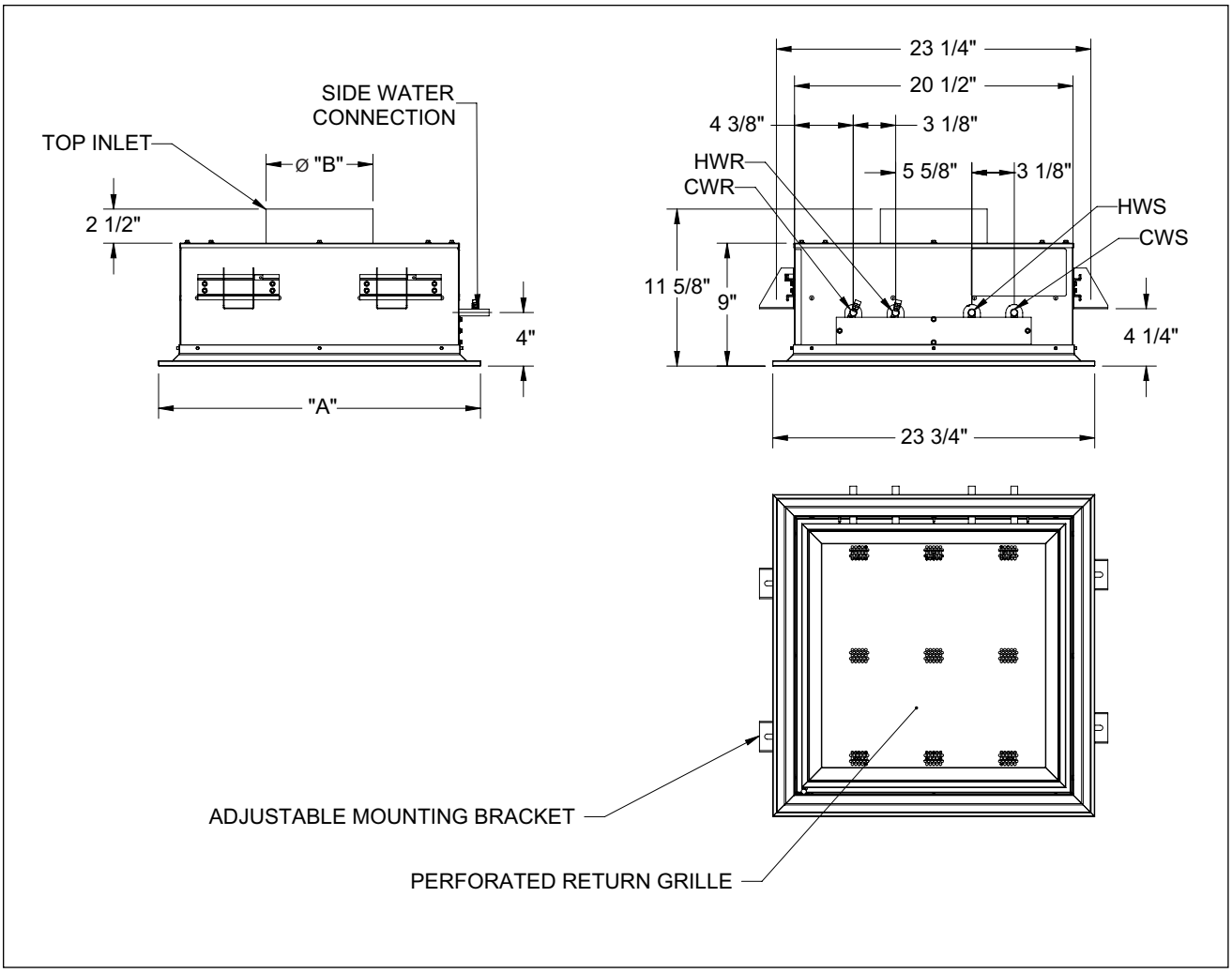

Module Size (IN)	'A' Dimension
24 x 24	23¾
24 x 48	47¾

Nominal Inlet Diameter (IN)	'B' Dimension
4	Ø 3⅞
5	Ø 4⅞
6	Ø 5⅞
8	Ø 7⅞

All dimensions are in inches

CBAM / 4-PIPE COOLING

Nominal Size, L x W (ft)	Nozzle Size	Primary Air			Sound	Coil Sensible Cooling (Btu/h)								Induction ratio	Throw
		Inlet Dia.	Flow Rate	Inlet ΔPS		0.5 GPM		1.0 GPM		1.5 GPM		1.7 GPM			
		Inches	CFM	(in. H2O)	NC	qTOTAL	ΔCOIL	qTOTAL	ΔCOIL	qTOTAL	ΔCOIL	qTOTAL	ΔCOIL		
2 x 2	M13	4	11	0.13	15	521	0.50	590	2.00	606	4.40	-619	5.70	3.1	0 - 0 - 2
			16	0.28	15	686		785		808		-815			0 - 1 - 3
			21	0.49	15	869		1042		1072		-1102			1 - 1 - 6
	M17	4	18	0.18	15	626		711		731		-738		2.5	0 - 1 - 3
			24	0.33	15	793		934		962		-982			1 - 1 - 5
			30	0.51	18	936		1096		1138		-1160			1 - 2 - 8
	M23	5	30	0.19	19	813		940		968		-981		1.9	1 - 1 - 5
			45	0.44	24	1106		1273		1329		-1347			1 - 3 - 9
			60	0.77	28	1314		1505		1588		-1581			2 - 5 - 12
	M31	6	55	0.17	16	1046		1239		1281		-1311		1.5	1 - 3 - 9
			85	0.4	22	1358		1554		1639		-1637			3 - 6 - 13
			115	0.73	26	1511		1689		1787		-1791			5 - 9 - 16
4 x 2	M13	4	18	0.15	15	851	1.00	923	3.90	951	8.70	-956	11.20	3.5	0 - 1 - 3
			27	0.33	15	1228		1368		1446		-1487			1 - 2 - 6
			36	0.59	18	1497		1708		1804		-1844			1 - 3 - 11
	M17	5	25	0.14	15	916		999		1032		-1038		3.0	0 - 1 - 4
			40	0.36	18	1366		1543		1633		-1675			1 - 2 - 10
			55	0.68	23	1645		1907		2033		-2061			2 - 5 - 14
	M23	6	50	0.22	23	1439		1609		1705		-1756		2.6	1 - 2 - 9
			75	0.49	28	1836		2123		2261		-2294			2 - 5 - 15
			95	0.79	31	2158		2625		2814		-2896			4 - 9 - 19
	M31	8	90	0.18	20	1741		1991		2105		-2149		1.8	2 - 5 - 14
			135	0.41	25	2247		2749		2949		-3040			5 - 11 - 20
			180	0.73	29	2611		3166		3481		-3562			9 - 14 - 23

CBAM / 4-PIPE HEATING

Nominal Size, L x W (ft)	Nozzle Size	Primary Air			Sound	Coil Heating (Btu/h)								Induction ratio	Throw
		Inlet Dia.	Flow Rate	Inlet ΔPS		0.5 GPM		1.0 GPM		1.5 GPM		1.7 GPM			
		Inches	CFM	(in. H2O)	NC	qTOTAL	ΔCOIL	qTOTAL	ΔCOIL	qTOTAL	ΔCOIL	qTOTAL	ΔCOIL		
2 x 2	M13	4	11	0.13	15	858	0.10	971	0.30	998	0.70	1019	1.00	3.1	0 - 0 - 2
			16	0.28	15	1130		1293		1331		1343			0 - 1 - 3
			21	0.49	15	1432		1716		1766		1815			1 - 1 - 6
	M17	4	18	0.18	15	1031		1171		1204		1216		2.5	0 - 1 - 3
			24	0.33	15	1306		1538		1584		1617			1 - 1 - 5
			30	0.51	18	1542		1805		1874		1911			1 - 2 - 8
	M23	5	30	0.19	19	1339		1548		1594		1615		1.9	1 - 1 - 5
			45	0.44	24	1821		2096		2189		2219			1 - 3 - 9
			60	0.77	28	2164		2478		2615		2604			2 - 5 - 12
	M31	6	55	0.17	16	1722		2040		2109		2160		1.5	1 - 3 - 9
			85	0.4	22	2237		2560		2700		2697			3 - 6 - 13
			115	0.73	26	2488		2782		2943		2949			5 - 9 - 16
4 x 2	M13	4	18	0.15	15	1402	0.20	1519	0.70	1566	1.50	1575	2.00	3.5	0 - 1 - 3
			27	0.33	15	2022		2253		2382		2448			1 - 2 - 6
			36	0.59	18	2465		2813		2971		3037			1 - 3 - 11
	M17	5	25	0.14	15	1509		1645		1699		1710		3.0	0 - 1 - 4
			40	0.36	18	2249		2541		2689		2758			1 - 2 - 10
			55	0.68	23	2710		3141		3349		3394			2 - 5 - 14
	M23	6	50	0.22	23	2369		2649		2808		2892		2.6	1 - 2 - 9
			75	0.49	28	3023		3497		3724		3778			2 - 5 - 15
			95	0.79	31	3554		4323		4635		4769			4 - 9 - 19
	M31	8	90	0.18	20	2867		3278		3466		3539		1.8	2 - 5 - 14
			135	0.41	25	3700		4527		4857		5007			5 - 11 - 20
			180	0.73	29	4300		5213		5732		5866			9 - 14 - 23

Note: Reference page U44 for operational conditions used for performance notes

CBAM / 2-PIPE COOLING

Nominal Size, L x W (ft)	Nozzle Size	Primary Air			Sound	Coil Sensible Cooling (Btu/h)								Induction ratio	Throw
		Inlet Dia.	Flow Rate	Inlet ΔPS		0.5 GPM		1.0 GPM		1.5 GPM		1.7 GPM			
		Inches	CFM	(in. H20)	NC	qTOTAL	ΔCOIL	qTOTAL	ΔCOIL	qTOTAL	ΔCOIL	qTOTAL	ΔCOIL		
2 x 2	M13	4	11	0.13	15	556	0.60	629	2.40	646	5.40	660	6.90	3.1	0 - 0 -2
			16	0.28	15	732		837		862		870			0 - 1 -3
			21	0.49	15	927		1111		1144		1176			1 - 1 -6
	M17	4	18	0.18	15	668		759		780		788		2.5	0 - 1 - 3
			24	0.33	15	846		996		1026		1047			1 - 1 - 5
			30	0.51	18	999		1169		1214		1238			1 - 2 - 8
	M23	5	30	0.19	19	868		1003		1033		1046		1.9	1 - 1 - 5
			45	0.44	24	1179		1357		1418		1437			1 - 3 - 9
			60	0.77	28	1402		1605		1694		1687			2 - 5 - 12
	M31	6	55	0.17	16	1115		1321		1366		1399		1.5	1 - 3 -9
			85	0.4	22	1449		1658		1749		1747			3 - 6 - 13
			115	0.73	26	1611		1802		1906		1910			5 - 9 - 16
4 x 2	M13	4	18	0.15	15	908	1.20	984	4.80	1014	10.70	1020	13.70	3.5	0 - 1 - 3
			27	0.33	15	1309		1459		1543		1586			1 - 2 - 6
			36	0.59	18	1596		1822		1925		1967			1 - 3 - 11
	M17	5	25	0.14	15	977		1065		1101		1107		3.0	0 - 1 - 4
			40	0.36	18	1457		1646		1741		1786			1 - 2 - 10
			55	0.68	23	1755		2034		2169		2198			2 - 5 - 14
	M23	6	50	0.22	23	1535		1716		1819		1873		2.6	1 - 2 - 9
			75	0.49	28	1958		2265		2412		2447			2 - 5 - 15
			95	0.79	31	2302		2800		3002		3089			4 - 9 - 19
	M31	8	90	0.18	20	1857		2123		2245		2292		1.8	2 - 5 - 14
			135	0.41	25	2397		2932		3146		3243			5 - 11 - 20
			180	0.73	29	2785		3377		3713		3799			9 - 14 - 23

CBAM / 2-PIPE HEATING

Nominal Size, L x W (ft)	Nozzle Size	Primary Air			Sound	Coil Heating (Btu/h)								Induction ratio	Throw
		Inlet Dia.	Flow Rate	Inlet ΔPS		0.5 GPM		1.0 GPM		1.5 GPM		1.7 GPM			
		Inches	CFM	(in. H20)	NC	qTOTAL	ΔCOIL	qTOTAL	ΔCOIL	qTOTAL	ΔCOIL	qTOTAL	ΔCOIL		
2 x 2	M13	4	11	0.13	15	1489	0.60	1685	2.40	1732	5.40	1769	6.90	3.1	0 - 0 - 2
			16	0.28	15	1962		2244		2311		2330			0 - 1 - 3
			21	0.49	15	2485		2978		3065		3151			1 - 1 - 6
	M17	4	18	0.18	15	1790		2033		2090		2111		2.5	0 - 1 - 3
			24	0.33	15	2267		2670		2749		2807			1 - 1 - 5
			30	0.51	18	2676		3133		3253		3317			1 - 2 - 8
	M23	5	30	0.19	19	2325		2687		2767		2803		1.9	1 - 1 - 5
			45	0.44	24	3161		3638		3799		3851			1 - 3 - 9
			60	0.77	28	3756		4301		4538		4520			2 - 5 - 12
	M31	6	55	0.17	16	2989		3541		3661		3748		1.5	1 - 3 - 9
			85	0.4	22	3883		4443		4686		4681			3 - 6 - 13
			115	0.73	26	4319		4829		5109		5119			5 - 9 - 16
4 x 2	M13	4	18	0.15	15	2433	1.20	2637	4.80	2718	10.70	2734	13.70	3.5	0 - 1 - 3
			27	0.33	15	3509		3910		4135		4250			1 - 2 - 6
			36	0.59	18	4278		4882		5158		5271			1 - 3 - 11
	M17	5	25	0.14	15	2619		2855		2949		2968		3.0	0 - 1 - 4
			40	0.36	18	3905		4410		4667		4788			1 - 2 - 10
			55	0.68	23	4703		5451		5813		5891			2 - 5 - 14
	M23	6	50	0.22	23	4113		4598		4875		5019		2.6	1 - 2 - 9
			75	0.49	28	5248		6070		6464		6558			2 - 5 - 15
			95	0.79	31	6168		7503		8045		8278			4 - 9 - 19
	M31	8	90	0.18	20	4977		5690		6017		6143		1.8	2 - 5 - 14
			135	0.41	25	6423		7858		8430		8691			5 - 11 - 20
			180	0.73	29	7463		9049		9950		10182			9 - 14 - 23

Note: Reference page U44 for operational conditions used for performance notes

NOTES:

1. All performance data based on test performed in accordance with ASHRAE Standard 200-2018.
2. ΔP_s values are measured in inches of water.
3. NC values are based on room absorption of 10 dB. A dash (-) indicates an NC value less than 15.
4. Throw values are based on isothermal supply air and represent throw distances to terminal velocities of 150, 100 and 50 fpm respectively
5. ΔP_{Coil} values are measured in feet of water. ΔP_{Coil} values in shaded cells indicate use of a two circuit coil. All other values represent a single circuit coil.
6. Induction ratio is multiplied by the volume flow rate of primary air to estimate the volume flow rate of room air entrained through the coil.

Cooling performance:

- Cooling capacity listed (qTOTAL) is the total sensible heat removal by the beam's integral coil. It does not include any contribution or offset by the primary air.

- Capacity is based on 18°F ΔT between the induced air and the heating water supply. Table 1 provides correction factors for other temperature differentials.

- Primary air sensible cooling contribution can be calculated by the following equation:

$$q_{SENSPA} = 1.085 \times CFM_{PA} \times (T_{ROOM} - T_{PA})$$

- Primary air latent cooling can be calculated by the following equation:

$$q_{LATENT} = 0.69 \times CFM_{PA} \times (W_{ROOM} - W_{PA})$$

where W_{ROOM} and W_{PA} are the humidity ratio of the room and primary air respectively expressed in Grains of moisture per pound dry air

TABLE 4: CORRECTION FOR (ΔT) BETWEEN ENTERING AIR AND ENTERING HEATING WATER

Actual ΔT	10	12	14	16	**18**	20	22	24
Multiply Table Value by:	0.56	0.67	0.78	0.89	**1.00**	1.11	1.22	1.33

Heating performance:

- Heating capacity listed (qTOTAL) is the sensible heat removal by the beam's integral coil. It does not include any contribution or offset by the primary air

- Capacity is based on 50°F ΔT between the induced air and the chilled water supply. Table 2 provides correction factors for other temperature differentials.

- Primary air sensible heating offset (or contribution) can be calculated by the following equation:

$$q_{SENSPA} = 1.085 \times CFM_{PA} \times (T_{PA} - T_{ROOM})$$

if the primary air temperature is lower than that of the room, it will offset the coil's heating

if the primary air temperature is higher than that of the room, it will contribute to the coil's heating

TABLE 2: CORRECTION FOR (ΔT) BETWEEN ENTERING AIR AND ENTERING CHILLED WATER

Actual ΔT	20	30	40	**50**	60	70	80	90	100	110	120
Multiply Table Value by:	0.40	0.60	0.80	**1.00**	1.20	1.40	1.60	1.80	2.00	2.20	2.40

Legend:

ΔP_S = Unit Inlet Pressure [in wg]

qCoil = Sensible Capacity, Coil [Btu/h]

ΔCoil = Water coil pressure drop [ft wg]

q_{SENSPA} = Sensible Capacity, Primary Air [Btu/h]

CFM_{PA} = Air Flowrate, Primary Air [CFM]

T_{PA} = Temperature Primary Air [°F]

T_{ROOM} = Temperature Room Air [°F]

q_{LATENT} = Latent Capacity, Primary Air [Btu/h]

Vertical Recessed Active Chilled Beams

CBAV

- Active chilled beam for use in recessed applications
- Optimized nozzle design provides high capacity and low noise levels
- Vertical coil with condensate pan
- Designed to integrate with Titus slot diffusers
- Optimized diffuser geometry maximizes occupant comfort

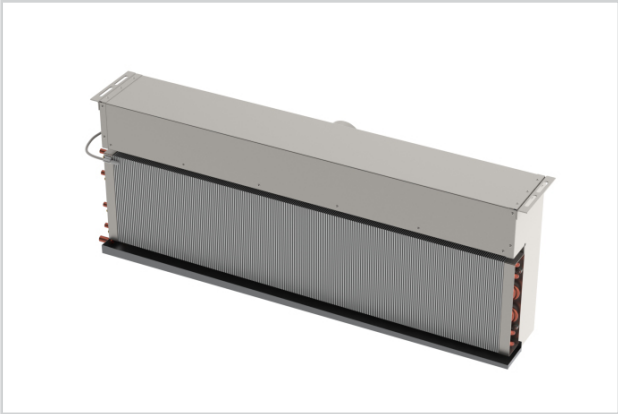

CBAV

dual-function k-12 education universities energy solutions

See website for Specifications

MODEL:

CBAV: Vertical Recessed Chilled Beam

OVERVIEW

Titus active chilled beams benefit from the use of using hydronic coils and induced air to reduce energy consumption associated with removal of sensible thermal loads. The primary air is supplied to the chilled beam subsequent to it being discharged through a series of nozzles located along the length of the beam. The nozzles inject the primary air into the mixing chamber at velocities capable of inducing plenum or soffit air through the water coil and where it mixes with the primary supply air. This mixture of air is then discharged into the space through ceiling slot diffusers. This provides high cooling outputs with low amounts of primary air. The reduced volume of air results in the reduction of the air handler capacity and size, smaller duct sizes, and the overall energy consumption.

The supplied air from the air handling unit is tempered and dehumidified to handle the latent load. The remaining loads in the space are addressed with the heat exchanger which is incorporated into the chilled beam. Applications with low latent cooling loads could use 100 percent outdoor air allowing for use of a dedicated outdoor air system with energy recovery further reducing total system energy consumption.

The CBAV's are offered for both, cooling and heating, lengths from 2 to 8 ft. They can be easily integrated with many of Titus' slot diffusers. Units can have single slot diffusers installed directly to the discharge of the chilled beam, or CBAV beams can be located in specific locations above a long run of slot differs creating active and inactive sections.

ADVANTAGES

- Removal of high thermal loads is possible in this air/water system
- The size of the air duct system is reduced to a minimum, due to the low supply of primary air
- Substantial reduction in the operating costs, due to low primary air volume
- Improvement of the thermal comfort inside the room
- Contributing sound levels below NC-30

CBAV STANDARD FEATURES

- 2 foot to 8 foot lengths
- Left hand or right hand coil connections
- Rear air inlet locations
- 2-pipe and 4-pipe coil configurations
- Configured nozzle geometry for capacity optimization
- Commissioning port with roomside access for balancing
- Mounting brackets with adjustments in two directions
- ½" Sweat water coil connections
- Coil air vent
- Condensate tray with drain connection for field plumbing

OPTIONS AND ACCESSORIES

- ½" thick foil-faced EcoShield, anti-microbial external insulation
- Coil drain valve
- ½" MNPT water coil connections
- 12-inch, 18-inch or 24-inch stainless steel braided hoses

Redefine your comfort zone. ™ | www.titus-hvac.com

CBAV UNIT DIMENSIONS

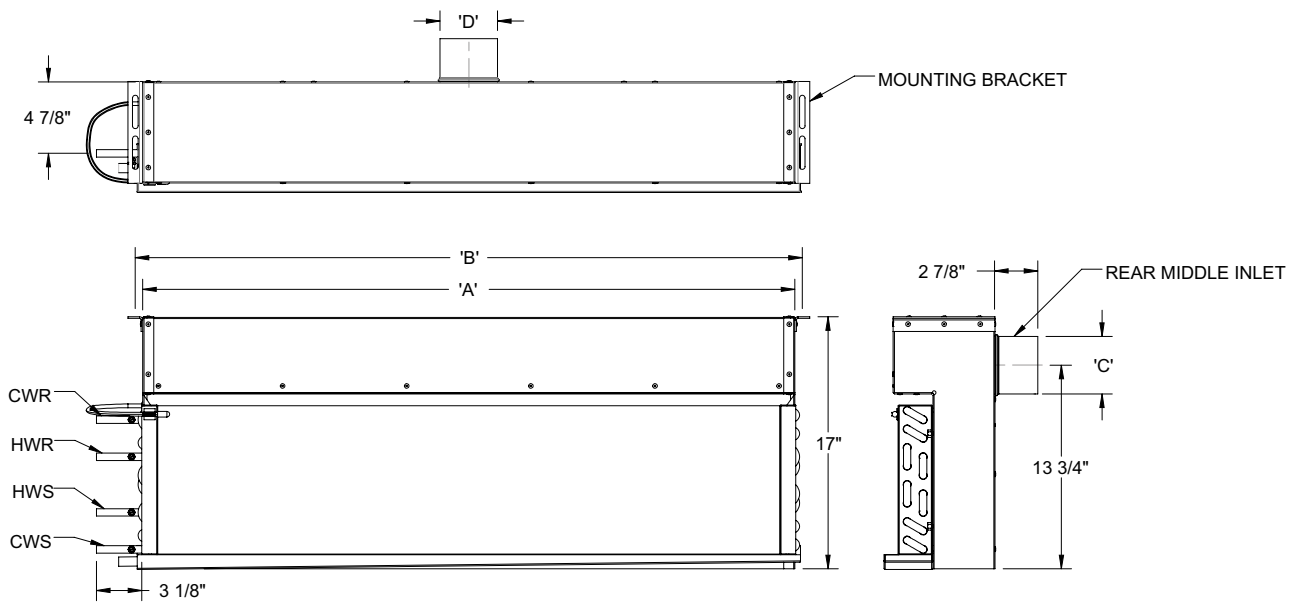

CBAV VERTICAL RECESSED BEAM

Nominal Unit Length (ft)	'A' (IN)	'B' (IN)
2	20	21
3	32	33
4	44	45
6	68	69
8	92	93

Nominal Inlet (IN)	'C' (IN)	'D' (IN)
4 IN Round	3 7/8	-
5 IN Round	4 7/8	-
6 IN Oval	5¼	6¼
8 IN Oval	5¼	9 3/8

All dimensions are in inches

CBAV / 4-PIPE COOLING

Nominal Length ft	Nozzle Size	Primary Air			Sound	Coil Sensible Cooling (Btu/h)								Induction ratio	Throw ft
		Inlet Dia.	Flow Rate	Inlet ΔPS		1.0 GPM		2.0 GPM		3.0 GPM		4.0 GPM			
		Inches	CFM	(in. H2O)	NC	qTOTAL	ΔCOIL	qTOTAL	ΔCOIL	qTOTAL	ΔCOIL	qTOTAL	ΔCOIL		
2	M13	4	3	0.36	15	278	0.40	303	1.60	309	3.50	311	6.20	7.2	0 - 0 - 1
			4	0.64	15	357		392		402		404			0 - 0 - 1
			5	1.00	15	433		479		492		496			0 - 0 - 2
	M17	4	4	0.22	15	312		341		348		350		5.7	0 - 0 - 1
			6	0.49	15	445		491		504		508			0 - 1 - 2
			8	0.87	15	567		632		653		659			0 - 1 - 4
	M23	4	9	0.30	15	554		615		634		639		4.8	0 - 1 - 3
			12	0.54	15	687		780		809		819			1 - 1 - 5
			15	0.84	15	812		936		976		991			1 - 2 - 7
	M31	4	15	0.18	15	642		723		747		756		3.4	0 - 1 - 4
			21	0.35	15	827		953		994		1010			1 - 2 - 7
			27	0.58	21	983		1155		1214		1237			2 - 4 - 9
3	M13	4	5	0.29	15	452	0.60	499	2.20	512	5.00	515	8.80	7.2	0 - 0 - 1
			7	0.57	15	602		675		697		704			0 - 0 - 2
			9	0.94	15	735		837		869		880			0 - 1 - 3
	M17	4	7	0.21	15	528		586		603		607		5.7	0 - 0 - 2
			10	0.42	15	712		805		833		842			0 - 1 - 3
			13	0.72	15	877		1007		1048		1063			1 - 1 - 5
	M23	4	13	0.20	15	778		884		917		928		4.8	0 - 1 - 3
			19	0.43	15	1038		1212		1269		1292			1 - 2 - 7
			25	0.74	21	1250		1497		1583		1618			1 - 3 - 9
	M31	4	25	0.20	15	1010		1173		1226		1246		3.4	1 - 2 - 7
			35	0.39	21	1274		1526		1612		1648			1 - 3 - 10
			45	0.64	28	1487		1828		1952		2006			2 - 5 - 13
4	M13	4	6	0.20	15	542	0.70	601	2.90	617	6.40	622	1.50	7.2	0 - 0 - 1
			9	0.44	15	754		857		888		899			0 - 0 - 2
			12	0.78	15	943		1094		1142		1161			0 - 1 - 3
	M17	4	10	0.20	15	726		820		848		857		5.7	0 - 1 - 2
			14	0.40	15	954		1100		1146		1163			0 - 1 - 4
			18	0.66	16	1152		1355		1421		1448			1 - 2 - 7
	M23	4	18	0.19	15	1028		1194		1246		1266		4.8	0 - 1 - 4
			27	0.42	18	1372		1654		1751		1791			1 - 2 - 9
			36	0.74	26	1640		2044		2191		2257			2 - 4 - 12
	M31	6	30	0.15	15	1196		1406		1474		1502		3.4	1 - 2 - 6
			50	0.41	16	1665		2071		2219		2284			2 - 4 - 12
			70	0.81	26	2003		2604		2841		2951			4 - 9 - 16
6	M13	4	10	0.20	15	732	1.00	832	4.10	854	9.30	865	2.10	7.2	0 - 0 - 1
			14	0.40	15	947		1110		1151		1172			0 - 1 - 3
			18	0.66	16	1136		1363		1427		1459			0 - 1 - 4
	M17	4	16	0.20	15	939		1091		1129		1148		5.7	0 - 1 - 3
			22	0.38	15	1193		1426		1490		1523			1 - 1 - 5
			28	0.62	22	1401		1721		1817		1866			1 - 2 - 9
	M23	6	30	0.20	15	1328		1613		1696		1739		4.8	1 - 2 - 6
			45	0.44	15	1875		2281		2448		2535			2 - 3 - 12
			60	0.79	24	2255		2873		3141		3285			3 - 6 - 16
	M31	6	55	0.21	15	1693		2056		2189		2259		3.4	1 - 3 - 11
			80	0.45	22	2247		2835		3088		3221			3 - 6 - 16
			105	0.77	30	2538		3357		3728		3931			5 - 10 - 20

Note: Reference page U60 for operational conditions used for performance notes

Redefine your comfort zone. ™ | www.titus-hvac.com

CBAV / 4-PIPE HEATING

Nominal Length ft	Nozzle Size	Primary Air			Sound	Coil Heating (Btu/h)								Induction ratio	Throw ft
		Inlet Dia.	Flow Rate	Inlet ΔPS		1.0 GPM		2.0 GPM		3.0 GPM		4.0 GPM			
		Inches	CFM	(in. H2O)	NC	qTOTAL	ΔCOIL	qTOTAL	ΔCOIL	qTOTAL	ΔCOIL	qTOTAL	ΔCOIL		
2	M13	4	3	0.36	15	618	0.08	672	0.34	687	0.76	690	1.36	7.2	0 - 0 - 1
			4	0.64	15	794		872		893		898			0 - 0 - 1
			5	1.00	15	963		1064		1094		1102			0 - 0 - 2
	M17	4	4	0.22	15	694		757		773		778		5.7	0 - 0 - 1
			6	0.49	15	988		1091		1120		1128			0 - 1 - 2
			8	0.87	15	1261		1405		1450		1464			0 - 1 - 4
	M23	4	9	0.30	15	1231		1366		1409		1421		4.8	0 - 1 - 3
			12	0.54	15	1527		1734		1797		1820			1 - 1 - 5
			15	0.84	15	1803		2080		2169		2203			1 - 2 - 7
	M31	4	15	0.18	15	1427		1606		1661		1679		3.4	0 - 1 - 4
			21	0.35	15	1838		2119		2209		2244			1 - 2 - 7
			27	0.58	21	2184		2567		2697		2750			2 - 4 - 9
3	M13	4	5	0.29	15	1003	0.12	1108	0.49	1137	1.10	1145	1.95	7.2	0 - 0 - 1
			7	0.57	15	1337		1501		1548		1563			0 - 0 - 2
			9	0.94	15	1633		1861		1930		1955			0 - 1 - 3
	M17	4	7	0.21	15	1174		1303		1339		1350		5.7	0 - 0 - 2
			10	0.42	15	1583		1789		1851		1872			0 - 1 - 3
			13	0.72	15	1949		2239		2330		2363			1 - 1 - 5
	M23	4	13	0.20	15	1728		1965		2037		2062		4.8	0 - 1 - 3
			19	0.43	15	2307		2694		2821		2870			1 - 2 - 7
			25	0.74	21	2777		3327		3517		3595			1 - 3 - 9
	M31	4	25	0.20	15	2244		2606		2723		2768		3.4	1 - 2 - 7
			35	0.39	21	2832		3390		3582		3662			1 - 3 - 10
			45	0.64	28	3304		4063		4337		4457			2 - 5 - 13
4	M13	4	6	0.20	15	1203	0.16	1335	0.63	1371	1.41	1382	2.51	7.2	0 - 0 - 1
			9	0.44	15	1675		1905		1974		1998			0 - 0 - 2
			12	0.78	15	2095		2432		2539		2580			0 - 1 - 3
	M17	4	10	0.20	15	1614		1822		1883		1905		5.7	0 - 1 - 2
			14	0.40	15	2120		2444		2546		2584			0 - 1 - 4
			18	0.66	16	2559		3010		3158		3217			1 - 2 - 7
	M23	4	18	0.19	15	2286		2653		2769		2814		4.8	0 - 1 - 4
			27	0.42	18	3049		3675		3891		3980			1 - 2 - 9
			36	0.74	26	3645		4541		4870		5015			2 - 4 - 12
	M31	6	30	0.15	15	2657		3123		3276		3337		3.4	1 - 2 - 6
			50	0.41	16	3700		4602		4930		5075			2 - 4 - 12
			70	0.81	26	4451		5786		6312		6558			4 - 9 - 16
6	M13	4	10	0.20	15	1626	0.23	1850	0.92	1899	2.06	1923	3.67	7.2	0 - 0 - 1
			14	0.40	15	2105		2466		2558		2605			0 - 1 - 3
			18	0.66	16	2524		3029		3171		3243			0 - 1 - 4
	M17	4	16	0.20	15	2087		2425		2508		2551		5.7	0 - 1 - 3
			22	0.38	15	2650		3168		3312		3385			1 - 1 - 5
			28	0.62	22	3114		3824		4038		4147			1 - 2 - 9
	M23	6	30	0.20	15	2952		3585		3770		3864		4.8	1 - 2 - 6
			45	0.44	15	4168		5070		5440		5634			2 - 3 - 12
			60	0.79	24	5011		6385		6981		7299			3 - 6 - 16
	M31	6	55	0.21	15	3761		4569		4866		5019		3.4	1 - 3 - 11
			80	0.45	22	4993		6300		6861		7159			3 - 6 - 16
			105	0.77	30	5640		7459		8284		8736			5 - 10 - 20

Note: Reference page U60 for operational conditions used for performance notes

CBAV / 2-PIPE COOLING

Nominal Length ft	Nozzle Size	Primary Air			Sound	Coil Sensible Cooling (Btu/h)								Induction ratio	Throw ft
		Inlet Dia.	Flow Rate	Inlet ΔPS		1.0 GPM		2.0 GPM		3.0 GPM		4.0 GPM			
		Inches	CFM	(in. H2O)	NC	qTOTAL	ΔCOIL	qTOTAL	ΔCOIL	qTOTAL	ΔCOIL	qTOTAL	ΔCOIL		
2	M13	4	3	0.36	15	297	0.50	323	2.10	330	4.70	331	8.40	7.2	0 - 0 - 1
			4	0.64	15	381		418		429		431			0 - 0 - 1
			5	1.00	15	462		511		525		529			0 - 0 - 2
	M17	4	4	0.22	15	333		363		371		373		5.7	0 - 0 - 1
			6	0.49	15	474		524		538		541			0 - 1 - 2
			8	0.87	15	605		675		696		703			0 - 1 - 4
	M23	4	9	0.30	15	591		656		676		682		4.8	0 - 1 - 3
			12	0.54	15	733		832		863		874			1 - 1 - 5
			15	0.84	15	866		998		1041		1058			1 - 2 - 7
	M31	4	15	0.18	15	685		771		797		806		3.4	0 - 1 - 4
			21	0.35	15	882		1017		1060		1077			1 - 2 - 7
			27	0.58	21	1048		1232		1294		1320			2 - 4 - 9
3	M13	4	5	0.29	15	482	0.70	532	2.90	546	6.60	550	1.50	7.2	0 - 0 - 1
			7	0.57	15	642		721		743		750			0 - 0 - 2
			9	0.94	15	784		893		927		938			0 - 1 - 3
	M17	4	7	0.21	15	563		625		643		648		5.7	0 - 0 - 2
			10	0.42	15	760		859		888		898			0 - 1 - 3
			13	0.72	15	935		1075		1118		1134			1 - 1 - 5
	M23	4	13	0.20	15	830		943		978		990		4.8	0 - 1 - 3
			19	0.43	15	1108		1293		1354		1378			1 - 2 - 7
			25	0.74	21	1333		1597		1688		1726			1 - 3 - 9
	M31	4	25	0.20	15	1077		1251		1307		1329		3.4	1 - 2 - 7
			35	0.39	21	1359		1627		1720		1758			1 - 3 - 10
			45	0.64	28	1586		1950		2082		2139			2 - 5 - 13
4	M13	4	6	0.20	15	578	1.00	641	3.80	658	8.60	663	1.90	7.2	0 - 0 - 1
			9	0.44	15	804		914		947		959			0 - 0 - 2
			12	0.78	15	1006		1167		1218		1238			0 - 1 - 3
	M17	4	10	0.20	15	775		875		904		914		5.7	0 - 1 - 2
			14	0.40	15	1018		1173		1222		1240			0 - 1 - 4
			18	0.66	16	1228		1445		1516		1544			1 - 2 - 7
	M23	4	18	0.19	15	1097		1273		1329		1351		4.8	0 - 1 - 4
			27	0.42	18	1463		1764		1868		1911			1 - 2 - 9
			36	0.74	26	1749		2180		2337		2407			2 - 4 - 12
	M31	6	30	0.15	15	1275		1499		1573		1602		3.4	1 - 2 - 6
			50	0.41	16	1776		2209		2367		2436			2 - 4 - 12
			70	0.81	26	2136		2777		3030		3148			4 - 9 - 16
6	M13	4	10	0.20	15	781	1.40	888	5.50	911	1.60	923	2.80	7.2	0 - 0 - 1
			14	0.40	15	1010		1184		1228		1250			0 - 1 - 3
			18	0.66	16	1211		1454		1522		1557			0 - 1 - 4
	M17	4	16	0.20	15	1002		1164		1204		1224		5.7	0 - 1 - 3
			22	0.38	15	1272		1521		1590		1625			1 - 1 - 5
			28	0.62	22	1495		1835		1938		1991			1 - 2 - 9
	M23	6	30	0.20	15	1417		1721		1809		1855		4.8	1 - 2 - 6
			45	0.44	15	2000		2433		2611		2705			2 - 3 - 12
			60	0.79	24	2405		3065		3351		3504			3 - 6 - 16
	M31	6	55	0.21	15	1805		2193		2335		2409		3.4	1 - 3 - 11
			80	0.45	22	2396		3024		3293		3436			3 - 6 - 16
			105	0.77	30	2707		3581		3976		4193			5 - 10 - 20

Note: Reference page U60 for operational conditions used for performance notes

CBAV / 2-PIPE HEATING

Nominal Length ft	Nozzle Size	Primary Air			Sound	Coil Heating (Btu/h)								Induction ratio	Throw ft
		Inlet Dia.	Flow Rate	Inlet ΔPS		1.0 GPM		2.0 GPM		3.0 GPM		4.0 GPM			
		Inches	CFM	(in. H2O)	NC	qTOTAL	ΔCOIL	qTOTAL	ΔCOIL	qTOTAL	ΔCOIL	qTOTAL	ΔCOIL		
2	M13	4	3	0.36	15	824	0.52	896	2.09	915	4.70	920	8.36	7.2	0 - 0 - 1
			4	0.64	15	1058		1162		1191		1198			0 - 0 - 1
			5	1.00	15	1283		1418		1458		1469			0 - 0 - 2
	M17	4	4	0.22	15	926		1009		1031		1037		5.7	0 - 0 - 1
			6	0.49	15	1318		1454		1494		1504			0 - 1 - 2
			8	0.87	15	1681		1874		1934		1952			0 - 1 - 4
	M23	4	9	0.30	15	1641		1822		1878		1894		4.8	0 - 1 - 3
			12	0.54	15	2035		2311		2397		2427			1 - 1 - 5
			15	0.84	15	2405		2773		2892		2938			1 - 2 - 7
	M31	4	15	0.18	15	1903		2141		2214		2239		3.4	0 - 1 - 4
			21	0.35	15	2451		2825		2946		2992			1 - 2 - 7
			27	0.58	21	2912		3422		3596		3666			2 - 4 - 9
3	M13	4	5	0.29	15	1338	0.74	1477	2.94	1516	6.62	1526	1.50	7.2	0 - 0 - 1
			7	0.57	15	1783		2001		2064		2084			0 - 0 - 2
			9	0.94	15	2177		2481		2574		2607			0 - 1 - 3
	M17	4	7	0.21	15	1565		1737		1785		1800		5.7	0 - 0 - 2
			10	0.42	15	2110		2386		2468		2495			0 - 1 - 3
			13	0.72	15	2598		2985		3106		3151			1 - 1 - 5
	M23	4	13	0.20	15	2304		2620		2716		2749		4.8	0 - 1 - 3
			19	0.43	15	3077		3592		3761		3827			1 - 2 - 7
			25	0.74	21	3702		4436		4689		4794			1 - 3 - 9
	M31	4	25	0.20	15	2992		3475		3631		3691		3.4	1 - 2 - 7
			35	0.39	21	3776		4520		4777		4882			1 - 3 - 10
			45	0.64	28	4406		5417		5782		5942			2 - 5 - 13
4	M13	4	6	0.20	15	1604	0.95	1779	3.80	1827	8.55	1842	1.94	7.2	0 - 0 - 1
			9	0.44	15	2233		2539		2631		2665			0 - 0 - 2
			12	0.78	15	2793		3242		3385		3440			0 - 1 - 3
	M17	4	10	0.20	15	2152		2430		2511		2540		5.7	0 - 1 - 2
			14	0.40	15	2827		3259		3394		3445			0 - 1 - 4
			18	0.66	16	3412		4014		4211		4290			1 - 2 - 7
	M23	4	18	0.19	15	3047		3537		3692		3753		4.8	0 - 1 - 4
			27	0.42	18	4065		4900		5189		5307			1 - 2 - 9
			36	0.74	26	4860		6055		6493		6687			2 - 4 - 12
	M31	6	30	0.15	15	3542		4165		4368		4449		3.4	1 - 2 - 6
			50	0.41	16	4933		6136		6574		6767			2 - 4 - 12
			70	0.81	26	5934		7714		8416		8745			4 - 9 - 16
6	M13	4	10	0.20	15	2169	1.38	2466	5.51	2532	1.58	2564	2.81	7.2	0 - 0 - 1
			14	0.40	15	2807		3288		3411		3473			0 - 1 - 3
			18	0.66	16	3365		4038		4227		4324			0 - 1 - 4
	M17	4	16	0.20	15	2783		3233		3344		3401		5.7	0 - 1 - 3
			22	0.38	15	3533		4225		4416		4514			1 - 1 - 5
			28	0.62	22	4152		5099		5384		5530			1 - 2 - 9
	M23	6	30	0.20	15	3936		4780		5026		5152		4.8	1 - 2 - 6
			45	0.44	15	5557		6760		7254		7513			2 - 3 - 12
			60	0.79	24	6682		8514		9308		9732			3 - 6 - 16
	M31	6	55	0.21	15	5015		6093		6487		6692		3.4	1 - 3 - 11
			80	0.45	22	6657		8400		9149		9545			3 - 6 - 16
			105	0.77	30	7520		9946		11045		11648			5 - 10 - 20

Note: Reference page U60 for operational conditions used for performance notes

NOTES:

1. All performance data based on test performed in accordance with ASHRAE Standard 200-2018.
2. ΔP_s values are measured in inches of water.
3. NC values are based on room absorption of 10 dB. A dash (-) indicates an NC value less than 15.
4. Throw values are based on isothermal supply air and represent throw distances to terminal velocities of 150, 100 and 50 fpm respectively
5. ΔP_{Coil} values are measured in feet of water. ΔP_{Coil} values in shaded cells indicate use of a two circuit coil. All other values represent a single circuit coil.
6. Induction ratio is multiplied by the volume flow rate of primary air to estimate the volume flow rate of room air entrained through the coil.

Cooling performance:

- Cooling capacity listed (qTOTAL) is the total sensible heat removal by the beam's integral coil. It does not include any contribution or offset by the primary air.

- Capacity is based on 18°F ΔT between the induced air and the chilled water supply. Table 1 provides correction factors for other temperature differentials.

- Primary air sensible cooling contribution can be calculated by the following equation:

$$q_{SENSPA} = 1.085 \times CFM_{PA} \times (T_{ROOM} - T_{PA})$$

- Primary air latent cooling can be calculated by the following equation:

$$q_{LATENT} = 0.69 \times CFM_{PA} \times (W_{ROOM} - W_{PA})$$

where W_{ROOM} and W_{PA} are the humidity ratio of the room and primary air respectively expressed in Grains of moisture per pound dry air

TABLE 4: CORRECTION FOR (ΔT) BETWEEN ENTERING AIR AND ENTERING CHILLED WATER

Actual ΔT	10	12	14	16	**18**	20	22	24
Multiply Table Value by:	0.56	0.67	0.78	0.89	**1.00**	1.11	1.22	1.33

Heating performance:

- Heating capacity listed (qTOTAL) is the sensible heat removal by the beam's integral coil. It does not include any contribution or offset by the primary air

- Capacity is based on 50°F ΔT between the induced air and the chilled water supply. Table 2 provides correction factors for other temperature differentials.

- Primary air sensible heating offset (or contribution) can be calculated by the following equation:

$$q_{SENSPA} = 1.085 \times CFM_{PA} \times (T_{PA} - T_{ROOM})$$

if the primary air temperature is lower than that of the room, it will offset the coil's heating

if the primary air temperature is higher than that of the room, it will contribute to the coil's heating

TABLE 2: CORRECTION FOR (ΔT) BETWEEN ENTERING AIR AND ENTERING CHILLED WATER

Actual ΔT	20	30	40	**50**	60	70	80	90	100	110	120
Multiply Table Value by:	0.40	0.60	0.80	**1.00**	1.20	1.40	1.60	1.80	2.00	2.20	2.40

Legend:

ΔP_S = Unit Inlet Pressure [in wg]

qCoil = Sensible Capacity, Coil [Btu/h]

ΔCoil = Water coil pressure drop [ft wg]

q_{SENSPA} = Sensible Capacity, Primary Air [Btu/h]

CFM_{PA} = Air Flowrate, Primary Air [CFM]

T_{PA} = Temperature Primary Air [°F]

T_{ROOM} = Temperature Room Air [°F]

q_{SENSPA} = Latent Capacity, Primary Air [Btu/h]

Under Sill Active Chilled Beams

CBAS

- Provides comfortable, effective sensible cooling to the space
- Optimized nozzle design provides high capacity and low noise levels
- Ideal for induction unit and unit ventilator retrofit projects
- Quick and simple installation
- Available in nominal lengths up to 6 feet

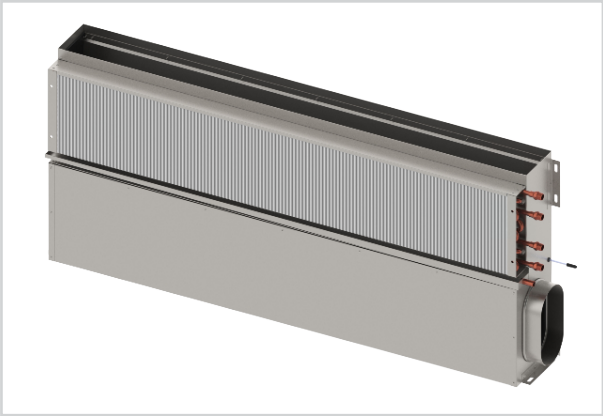

CBAS

dual-function | retrofit | k-12 education | universities | energy solutions

See website for Specifications

MODEL:

CBAS / Under sill active chilled beam

OVERVIEW

Titus active chilled beams benefit from the use of using hydronic coils and induced air to reduce energy consumption associated with removal of sensible thermal loads. The primary air is supplied to the chilled beam subsequent to it being discharged through a series of nozzles located along the length of the beam. The nozzles inject the primary air into the mixing chamber at velocities capable of inducing plenum or soffit air through the water coil and where it mixes with the primary supply air. This mixture of air is then discharged into the space through ceiling slot diffusers. This provides high cooling outputs with low amounts of primary air. The reduced volume of air results in the reduction of the air handler capacity and size, smaller duct sizes, and the overall energy consumption.

The supplied air from the air handling unit is tempered and dehumidified to handle the latent load. The remaining loads in the space are addressed with the heat exchanger which is incorporated into the chilled beam. Applications with low latent cooling loads could use 100 percent outdoor air allowing for use of a dedicated outdoor air system with energy recovery further reducing total system energy consumption.

The CBAS's are offered for both, cooling and heating, lengths from 2 to 6 ft. They can be easily integrated in retrofit projects where induction units, unit ventilator, or other under sill units are being replaced. Under sill active beams save significant energy and reduce sounds levels compared to other under sill mounted products. Additionally, the utilization of most or all of the existing piping and duct work minimizes project costs.

ADVANTAGES

- Removal of high thermal loads is possible in this air/water system
- The height of the air duct system is reduced to a minimum, due to the low supply of primary air
- Substantial reduction in the operating costs, due to low primary air volume
- Improvement of the thermal comfort inside the room
- Contributing sound levels below NC-30
- Coil lint screen
- Constant volume regulator

CBAS STANDARD FEATURES

- 2 foot to 6 foot lengths
- Left hand or right hand coil connections
- Left hand, right hand, or rear air inlet locations
- 2-pipe and 4-pipe coil configurations
- Configured nozzle geometry for capacity optimization
- Commissioning port with roomside access for balancing
- Mounting brackets with adjustments in two directions
- ½" Sweat water coil connections
- Coil air vent
- Condensate tray with drain connection for field plumbing

OPTIONS AND ACCESSORIES

- ½" thick foil-faced EcoShield, anti-microbial external insulation
- Coil drain valve
- ½" or ¾ MNPT water coil connections
- 12-inch, 18-inch or 24-inch stainless steel braided hoses
- Coil lint screen
- Constant volume regulator

Redefine your comfort zone. ™ | www.titus-hvac.com

CBAS UNIT DIMENSIONS

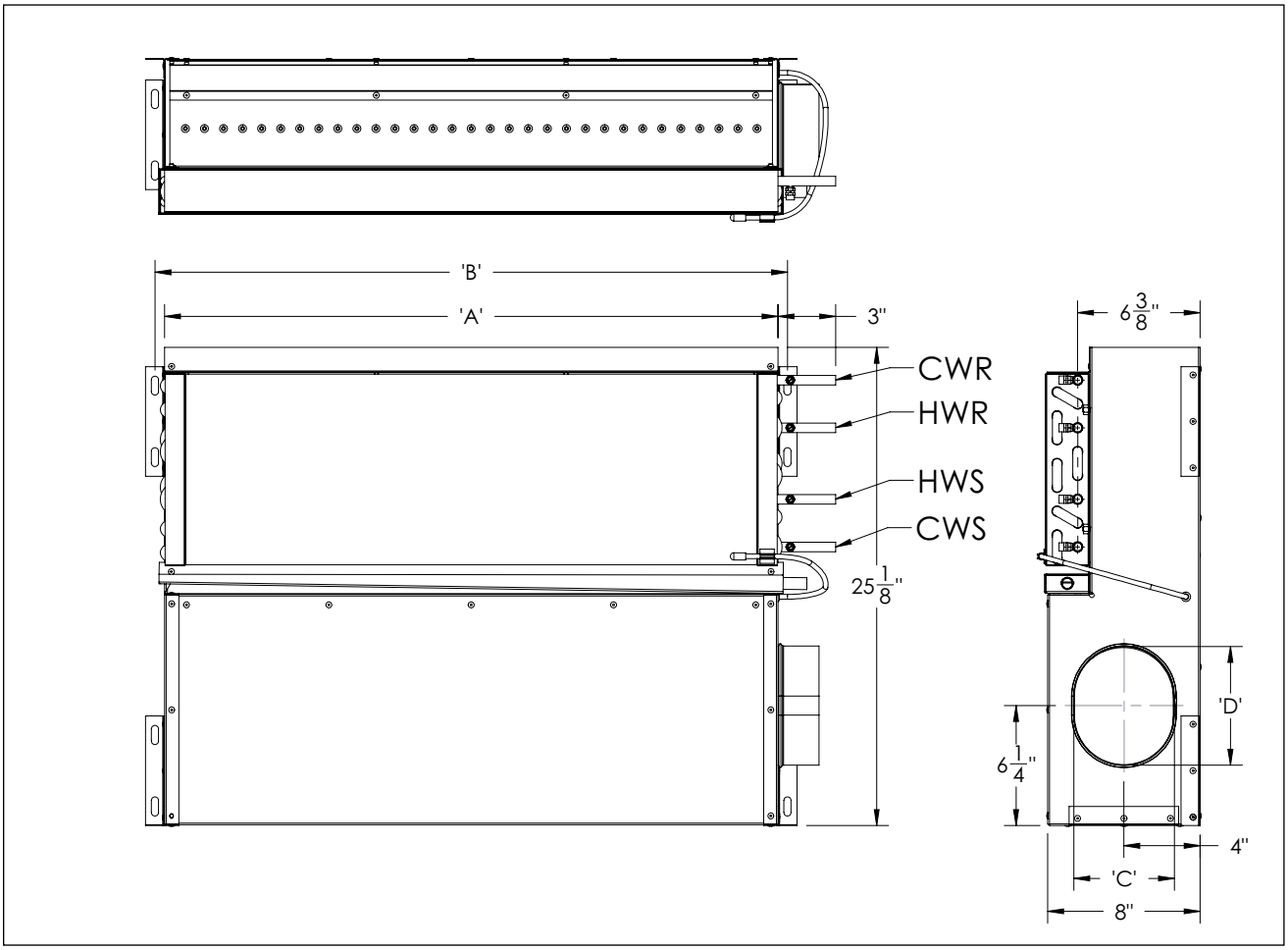

Nominal Length	A	B
3ft	32	33
4ft	44	45
5ft	56	57
6ft	68	69

Nominal Inlet (in)	C	D
4	3⅞"	-
5	4⅞"	-
6	5¼"	6¼"
8	5¼"	9⅜"

6 and 8 inlets are equalivalent oval

All dimensions are in inches

CBAS / 4-PIPE COOLING

Nominal Length ft	Nozzle Size	Primary Air			Sound	Coil Sensible Cooling (Btu/h)								Induction ratio
		Inlet Dia.	Flow Rate	Inlet ΔPS		1.0 GPM		2.0 GPM		3.0 GPM		4.0 GPM		
		Inches	CFM	(in. H2O)	NC	qTOTAL	ΔCOIL	qTOTAL	ΔCOIL	qTOTAL	ΔCOIL	qTOTAL	ΔCOIL	
3	M13	6" oval	6	0.42	15	527	0.60	587	2.20	604	5.00	609	8.80	7.2
			8	0.74	15	669		757		784		792		
			10	1.16	15	800		917		954		967		
	M17	6" oval	10	0.42	15	712		805		833		842		5.7
			13	0.72	15	877		1007		1048		1063		
			17	1.23	15	1065		1251		1312		1336		
	M23	6" oval	17	0.34	15	956		1107		1155		1174		4.2
			23	0.62	15	1184		1408		1484		1514		
			30	1.06	16	1398		1706		1816		1864		
	M31	6" oval	30	0.28	15	1150		1356		1425		1453		3.4
			40	0.50	15	1384		1678		1782		1827		
			55	0.94	24	1667		2098		2261		2335		
4	M13	6" oval	8	0.35	15	683	0.70	772	2.90	798	6.40	807	1.50	7.2
			10	0.54	15	824		943		979		992		
			14	1.06	15	1060		1244		1305		1329		
	M17	6" oval	12	0.29	15	846		965		1001		1014		5.7
			16	0.52	15	1053		1228		1284		1305		
			22	0.99	15	1318		1584		1675		1713		
	M23	6" oval	22	0.27	15	1193		1408		1479		1508		4.8
			30	0.51	15	1466		1789		1902		1950		
			42	1.00	20	1792		2275		2459		2543		
	M31	6" oval	42	0.29	15	1494		1822		1937		1986		3.4
			55	0.50	19	1763		2216		2386		2462		
			75	0.93	28	2072		2721		2981		3104		
5	M13	6" oval	10	0.31	15	718	0.90	819	3.50	842	7.90	853	1.80	7.2
			13	0.53	15	890		1031		1067		1085		
			18	1.02	15	1118		1340		1402		1434		
	M17	6" oval	16	0.31	15	935		1081		1118		1136		5.7
			20	0.48	15	1093		1294		1348		1376		
			28	0.94	15	1471		1735		1834		1885		
	M23	6" oval	28	0.26	15	1260		1509		1582		1619		4.8
			40	0.53	15	1753		2096		2236		2309		
			58	1.12	26	2168		2740		2987		3119		
	M31	6" oval	58	0.34	16	1836		2203		2354		2432		3.4
			70	0.50	22	2055		2534		2736		2842		
			97	0.96	31	2392		3107		3427		3601		
6	M13	6" oval	13	0.35	15	893	1.00	1040	4.10	1077	9.30	1096	2.10	7.2
			16	0.52	15	1054		1247		1299		1325		
			23	1.08	15	1351		1655		1751		1801		
	M17	6" oval	18	0.25	15	1031		1209		1255		1278		5.7
			25	0.49	15	1297		1573		1654		1695		
			34	0.91	18	1679		2035		2171		2242		
	M23	6" oval	30	0.20	15	1328		1613		1696		1739		4.8
			45	0.44	15	1875		2281		2448		2535		
			66	0.96	26	2354		3049		3356		3522		
	M31	6" oval	66	0.30	17	1979		2422		2606		2702		3.4
			85	0.50	24	2316		2952		3228		3376		
			120	1.00	34	2670		3620		4064		4310		

Note: Reference page U68 for operational conditions used for performance notes

CBAS / 4-PIPE HEATING

Nominal Length ft	Nozzle Size	Primary Air			Sound	Coil Heating (Btu/h)								Induction ratio
		Inlet Dia.	Flow Rate	Inlet ΔPS		1.0 GPM		2.0 GPM		3.0 GPM		4.0 GPM		
		Inches	CFM	(in. H2O)	NC	qTOTAL	ΔCOIL	qTOTAL	ΔCOIL	qTOTAL	ΔCOIL	qTOTAL	ΔCOIL	
3	M13	6" oval	6	0.42	15	1170	0.12	1305	0.49	1343	1.10	1256	1.95	7.2
			8	0.74	15	1487		1683		1741		1631		
			10	1.16	15	1778		2038		2119		1986		
	M17	6" oval	10	0.42	15	1583		1789		1851		1709		5.7
			13	0.72	15	1949		2239		2330		2152		
			17	1.23	15	2368		2779		2916		2693		
	M23	6" oval	17	0.34	15	2125		2460		2567		2331		4.8
			23	0.62	15	2632		3128		3297		2991		
			30	1.06	16	3106		3792		4037		3654		
	M31	6" oval	30	0.28	15	2555		3014		3168		2741		3.4
			40	0.50	15	3076		3730		3960		3408		
			55	0.94	24	3704		4662		5025		4295		
4	M13	6" oval	8	0.35	15	1518	0.16	1715	0.63	1773	1.41	1663	2.51	7.2
			10	0.54	15	1832		2095		2175		2041		
			14	1.06	15	2354		2765		2900		2725		
	M17	6" oval	12	0.29	15	1881		2145		2225		2059		5.7
			16	0.52	15	2340		2728		2852		2641		
			22	0.99	15	2929		3520		3723		3448		
	M23	6" oval	22	0.27	15	2652		3130		3287		2992		4.8
			30	0.51	15	3257		3975		4227		3846		
			42	1.00	20	3982		5056		5465		4967		
	M31	6" oval	42	0.29	15	3321		4049		4304		3729		3.4
			55	0.50	19	3918		4925		5302		4576		
			75	0.93	28	4605		6047		6624		5677		
5	M13	6" oval	10	0.31	15	1597	0.19	1819	0.78	1870	1.75	1733	3.11	7.2
			13	0.53	15	1979		2292		2371		2198		
			18	1.02	15	2483		2977		3116		2894		
	M17	6" oval	16	0.31	15	2077		2402		2484		2264		5.7
			20	0.48	15	2430		2875		2997		2732		
			28	0.94	15	3269		3856		4076		3733		
	M23	6" oval	28	0.26	15	2800		3353		3516		3142		4.8
			40	0.53	15	3895		4658		4970		4480		
			58	1.12	26	4818		6089		6638		5988		
	M31	6" oval	58	0.34	16	4080		4896		5231		4460		3.4
			70	0.50	22	4567		5632		6080		5177		
			97	0.96	31	5315		6905		7615		6423		
6	M13	6" oval	13	0.35	15	1985	0.23	2312	0.92	2393	2.06	2223	3.67	7.2
			16	0.52	15	2341		2771		2886		2683		
			23	1.08	15	3002		3678		3892		3627		
	M17	6" oval	18	0.25	15	2290		2686		2788		2547		5.7
			25	0.49	15	2882		3496		3675		3359		
			34	0.91	18	3732		4523		4824		4428		
	M23	6" oval	30	0.20	15	2952		3585		3770		3376		4.8
			45	0.44	15	4168		5070		5440		4902		
			66	0.96	26	5232		6776		7458		6753		
	M31	6" oval	66	0.30	17	4398		5383		5791		4930		3.4
			85	0.50	24	5146		6560		7174		6118		
			120	1.00	34	5934		8045		9032		7624		

Note: Reference page U68 for operational conditions used for performance notes

CBAS / 2-PIPE COOLING

Nominal Length ft	Nozzle Size	Primary Air			Sound	Coil Sensible Cooling (Btu/h)								Induction ratio
		Inlet Dia.	Flow Rate	Inlet ΔPS		1.0 GPM		2.0 GPM		3.0 GPM		4.0 GPM		
		Inches	CFM	(in. H2O)	NC	qTOTAL	ΔCOIL	qTOTAL	ΔCOIL	qTOTAL	ΔCOIL	qTOTAL	ΔCOIL	
3	M13	6" oval	6	0.42	15	562	0.70	626	2.90	644	6.60	650	1.50	7.2
			8	0.74	15	714		808		836		845		
			10	1.16	15	853		978		1017		1032		
	M17	6" oval	10	0.42	15	760		859		888		898		5.7
			13	0.72	15	935		1075		1118		1134		
			17	1.23	15	1137		1334		1400		1425		
	M23	6" oval	17	0.34	15	1020		1181		1232		1252		4.8
			23	0.62	15	1263		1502		1583		1615		
			30	1.06	16	1491		1820		1938		1989		
	M31	6" oval	30	0.28	15	1226		1447		1520		1550		3.4
			40	0.50	15	1476		1790		1901		1948		
			55	0.94	24	1778		2238		2412		2491		
4	M13	6" oval	8	0.35	15	728	1.00	823	3.80	851	8.60	861	1.90	7.2
			10	0.54	15	879		1005		1044		1058		
			14	1.06	15	1130		1327		1392		1417		
	M17	6" oval	12	0.29	15	903		1030		1068		1082		5.7
			16	0.52	15	1123		1309		1369		1392		
			22	0.99	15	1406		1690		1787		1827		
	M23	6" oval	22	0.27	15	1273		1502		1578		1608		4.8
			30	0.51	15	1563		1908		2029		2080		
			42	1.00	20	1912		2427		2623		2712		
	M31	6" oval	42	0.29	15	1594		1943		2066		2118		3.4
			55	0.50	19	1881		2364		2545		2626		
			75	0.93	28	2210		2902		3180		3311		
5	M13	6" oval	10	0.31	15	766	1.20	873	4.70	898	1.30	910	2.40	7.2
			13	0.53	15	950		1100		1138		1157		
			18	1.02	15	1192		1429		1496		1530		
	M17	6" oval	16	0.31	15	997		1153		1192		1212		5.7
			20	0.48	15	1166		1380		1438		1468		
			28	0.94	15	1569		1851		1957		2011		
	M23	6" oval	28	0.26	15	1344		1609		1687		1727		4.8
			40	0.53	15	1870		2236		2385		2463		
			58	1.12	26	2312		2923		3186		3327		
	M31	6" oval	58	0.34	16	1958		2350		2511		2594		3.4
			70	0.50	22	2192		2703		2918		3032		
			97	0.96	31	2551		3314		3655		3841		
6	M13	6" oval	13	0.35	15	953	1.40	1110	5.50	1149	1.60	1169	2.80	7.2
			16	0.52	15	1124		1330		1385		1413		
			23	1.08	15	1441		1766		1868		1921		
	M17	6" oval	18	0.25	15	1099		1289		1338		1363		5.7
			25	0.49	15	1383		1678		1764		1808		
			34	0.91	18	1791		2171		2316		2391		
	M23	6" oval	30	0.20	15	1417		1721		1809		1855		4.8
			45	0.44	15	2000		2433		2611		2705		
			66	0.96	26	2511		3253		3580		3757		
	M31	6" oval	66	0.30	17	2111		2584		2780		2882		3.4
			85	0.50	24	2470		3149		3443		3601		
			120	1.00	34	2848		3862		4335		4597		

Note: Reference page U68 for operational conditions used for performance notes

CBAS / 2-PIPE HEATING

Nominal Length ft	Nozzle Size	Primary Air			Sound	Coil Heating (Btu/h)								Induction ratio
		Inlet Dia.	Flow Rate	Inlet ΔPS		1.0 GPM		2.0 GPM		3.0 GPM		4.0 GPM		
		Inches	CFM	(in. H2O)	NC	qTOTAL	ΔCOIL	qTOTAL	ΔCOIL	qTOTAL	ΔCOIL	qTOTAL	ΔCOIL	
3	M13	6" oval	6	0.42	15	1561	0.74	1739	2.94	1790	6.62	1805	1.50	7.2
			8	0.74	15	1983		2244		2322		2348		
			10	1.16	15	2371		2718		2826		2865		
	M17	6" oval	10	0.42	15	2110		2386		2468		2495		5.7
			13	0.72	15	2598		2985		3106		3151		
			17	1.23	15	3157		3706		3888		3960		
	M23	6" oval	17	0.34	15	2833		3280		3423		3477		4.8
			23	0.62	15	3509		4171		4396		4487		
			30	1.06	16	4141		5056		5382		5524		
	M31	6" oval	30	0.28	15	3406		4019		4224		4305		3.4
			40	0.50	15	4101		4973		5280		5412		
			55	0.94	24	4939		6216		6700		6920		
4	M13	6" oval	8	0.35	15	2024	0.95	2286	3.80	2363	8.55	2390	1.94	7.2
			10	0.54	15	2443		2793		2899		2939		
			14	1.06	15	3139		3687		3866		3937		
	M17	6" oval	12	0.29	15	2508		2860		2966		3005		5.7
			16	0.52	15	3120		3637		3803		3868		
			22	0.99	15	3906		4694		4963		5074		
	M23	6" oval	22	0.27	15	3536		4173		4383		4467		4.8
			30	0.51	15	4342		5300		5636		5779		
			42	1.00	20	5310		6741		7286		7534		
	M31	6" oval	42	0.29	15	4428		5398		5739		5884		3.4
			55	0.50	19	5225		6566		7069		7295		
			75	0.93	28	6139		8062		8833		9197		
5	M13	6" oval	10	0.31	15	2129	1.16	2425	4.65	2493	1.33	2528	2.37	7.2
			13	0.53	15	2638		3056		3161		3213		
			18	1.02	15	3311		3969		4155		4249		
	M17	6" oval	16	0.31	15	2769		3203		3312		3365		5.7
			20	0.48	15	3240		3834		3996		4077		
			28	0.94	15	4358		5142		5435		5585		
	M23	6" oval	28	0.26	15	3733		4470		4687		4798		4.8
			40	0.53	15	5194		6211		6626		6841		
			58	1.12	26	6423		8118		8850		9242		
	M31	6" oval	58	0.34	16	5440		6529		6974		7205		3.4
			70	0.50	22	6090		7509		8106		8421		
			97	0.96	31	7087		9207		10154		10669		
6	M13	6" oval	13	0.35	15	2647	1.38	3082	5.51	3191	1.58	3246	2.81	7.2
			16	0.52	15	3122		3695		3847		3925		
			23	1.08	15	4002		4904		5189		5335		
	M17	6" oval	18	0.25	15	3053		3582		3718		3787		5.7
			25	0.49	15	3843		4662		4900		5022		
			34	0.91	18	4976		6031		6432		6642		
	M23	6" oval	30	0.20	15	3936		4780		5026		5152		4.8
			45	0.44	15	5557		6760		7254		7513		
			66	0.96	26	6976		9035		9944		10437		
	M31	6" oval	66	0.30	17	5864		7177		7721		8006		3.4
			85	0.50	24	6861		8747		9565		10002		
			120	1.00	34	7912		10727		12042		12770		

Note: Reference page U68 for operational conditions used for performance notes

NOTES:

1. All performance data based on test performed in accordance with ASHRAE Standard 200-2018.
2. ΔP_s values are measured in inches of water.
3. NC values are based on room absorption of 10 dB. A dash (-) indicates an NC value less than 15.
4. Throw values are based on isothermal supply air and represent throw distances to terminal velocities of 150, 100 and 50 fpm respectively
5. ΔP_{Coil} values are measured in feet of water. ΔP_{Coil} values in shaded cells indicate use of a two circuit coil. All other values represent a single circuit coil.
6. Induction ratio is multiplied by the volume flow rate of primary air to estimate the volume flow rate of room air entrained through the coil.

Cooling performance:

- Cooling capacity listed (qTOTAL) is the total sensible heat removal by the beam's integral coil. It does not include any contribution or offset by the primary air.

- Capacity is based on 18°F ΔT between the induced air and the chilled water supply. Table 1 provides correction factors for other temperature differentials.

- Primary air sensible cooling contribution can be calculated by the following equation:

$$q_{SENSPA} = 1.085 \times CFM_{PA} \times (T_{ROOM} - T_{PA})$$

- Primary air latent cooling can be calculated by the following equation:

$$q_{LATENT} = 0.69 \times CFM_{PA} \times (W_{ROOM} - W_{PA})$$

where W_{ROOM} and W_{PA} are the humidity ratio of the room and primary air respectively expressed in Grains of moisture per pound dry air

TABLE 4: CORRECTION FOR (ΔT) BETWEEN ENTERING AIR AND ENTERING CHILLED WATER

Actual ΔT	10	12	14	16	**18**	20	22	24
Multiply Table Value by:	0.56	0.67	0.78	0.89	**1.00**	1.11	1.22	1.33

Heating performance:

- Heating capacity listed (qTOTAL) is the sensible heat removal by the beam's integral coil. It does not include any contribution or offset by the primary air

- Capacity is based on 50°F ΔT between the induced air and the chilled water supply. Table 2 provides correction factors for other temperature differentials.

- Primary air sensible heating offset (or contribution) can be calculated by the following equation:

$$q_{SENSPA} = 1.085 \times CFM_{PA} \times (T_{PA} - T_{ROOM})$$

if the primary air temperature is lower than that of the room, it will offset the coil's heating

if the primary air temperature is higher than that of the room, it will contribute to the coil's heating

TABLE 2: CORRECTION FOR (ΔT) BETWEEN ENTERING AIR AND ENTERING CHILLED WATER

Actual ΔT	20	30	40	**50**	60	70	80	90	100	110	120
Multiply Table Value by:	0.40	0.60	0.80	**1.00**	1.20	1.40	1.60	1.80	2.00	2.20	2.40

Legend:

ΔP_S = Unit Inlet Pressure [in wg]

qCoil = Sensible Capacity, Coil [Btu/h]

ΔCoil = Water coil pressure drop [ft wg]

q_{SENSPA} = Sensible Capacity, Primary Air [Btu/h]

CFM_{PA} = Air Flowrate, Primary Air [CFM]

T_{PA} = Temperature Primary Air [°F]

T_{ROOM} = Temperature Room Air [°F]

q_{SENSPA} = Latent Capacity, Primary Air [Btu/h]

Bulkhead Mounted Recessed Active Chilled Beams

CBAB

- Provides comfortable, effective sensible cooling to the space
- Optimized nozzle design provides high capacity and low noise levels
- Ideal for single room hospitality spaces
- Quick and simple installation
- Available in nominal lengths up to 6 feet
- ½" Sweat or ½" MNPT coil connections

CBAB

healthcare | dual-function | hotels / motels | retrofit | universities | energy solutions

See website for Specifications

MODEL:

CBAB / Bulkhead Mounted Recessed Active Chilled Beam

OVERVIEW

Titus active chilled beams benefit from the use of using hydronic coils and induced air to reduce energy consumption associated with removal of sensible thermal loads. The primary air is supplied to the chilled beam subsequent to it being discharged through a series of nozzles located along the length of the beam. The nozzles inject the primary air into the mixing chamber at velocities capable of inducing plenum or soffit air through the water coil and where it mixes with the primary supply air. This mixture of air is then discharged into the space through ceiling slot diffusers. This provides high cooling outputs with low amounts of primary air. The reduced volume of air results in the reduction of the air handler capacity and size, smaller duct sizes, and the overall energy consumption.

The supplied air from the air handling unit is tempered and dehumidified to handle the latent load. The remaining loads in the space are addressed with the heat exchanger which is incorporated into the chilled beam. Applications with low latent cooling loads could use 100 percent outdoor air allowing for use of a dedicated outdoor air system with energy recovery further reducing total system energy consumption.

The CBAB bulkhead beams are the ideal solution for single room hospitality spaces, such as hotel, dorm, and hospital rooms. With their shallow height, ceiling heights can be maximized creating an open and inviting space. Bulkhead chilled beams are great for use in retrofit of buildings which were not originally built with HVAC systems originally installed.

ADVANTAGES

- Removal of high thermal loads is possible in this air/water system
- The height of the air duct system is reduced to a minimum, due to the low supply of primary air
- Substantial reduction in the operating costs, due to low primary air volume
- Improvement of the thermal comfort inside the room
- Contributing sound levels below NC-30

CBAB STANDARD FEATURES

- 2 foot to 6 foot lengths
- Left hand or right hand coil connections
- Rear air inlet location
- Louvered supply grille
- Perforated return grille
- 2-pipe and 4-pipe coil configurations
- Configured nozzle geometry for capacity optimization
- Commissioning port with roomside access for balancing
- Mounting brackets with adjustments in two directions
- ½" Sweat water coil connections
- Coil air vent

OPTIONS AND ACCESSORIES

- Linear Bar supply grille
- Linear Bar return grille
- Louvered Bar return grille
- Eggcrate Bar return grille
- ½" thick foil-faced EcoShield, anti-microbial external insulation
- Coil drain valve
- ½" or ¾ MNPT water coil connections
- 12-inch, 18-inch or 24-inch stainless steel braided hoses
- Coil lint screen
- Constant volume regulator

Redefine your comfort zone. ™ | www.titus-hvac.com

CBAB UNIT DIMENSIONS

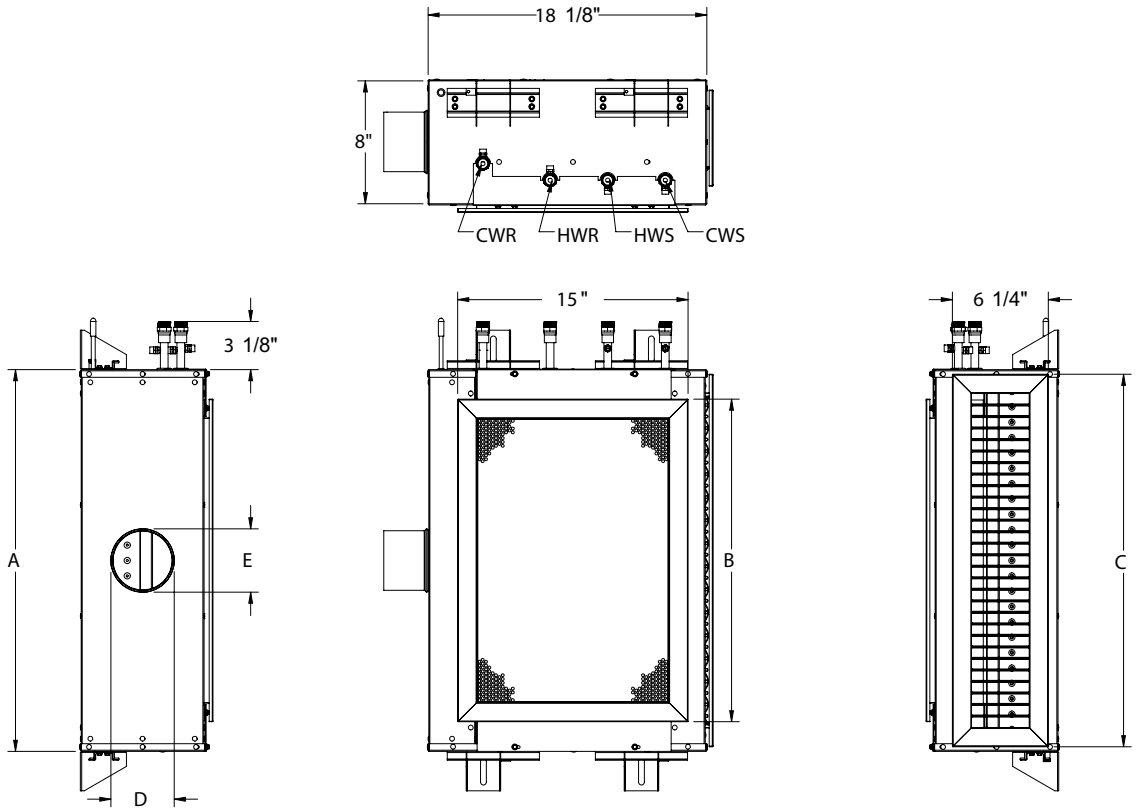

NOTE:
- SCREW HOLES ON GRILLES NOT SHOWN.
- 271RS SUPPLY AND 8R RETURN SHOWN, OTHER OPTIONS AVAILABLE.

Nominal	A	B	C
2ft	24 7/8	21	24 1/4
3ft	36 7/8	33	36 1/4
4ft	48 7/8	45	48 1/4
5ft	60 7/8	57	60 1/4
6ft	72 7/8	69	72 1/4

Inlet	D	E
4 IN Round	3 7/8	3 7/8
5 IN Round	4 7/8	4 7/8
6 IN Oval	5 1/4	6 1/4
8 IN Oval	5 1/4	9 3/8

All dimensions are in inches

CBAB / 4-PIPE COOLING

Nominal Length ft	Nozzle Size	Primary Air			Sound	Coil Sensible Cooling (Btu/h)								Induction ratio	Throw
		Inlet Dia.	Flow Rate	Inlet ΔPS		1.0 GPM		2.0 GPM		3.0 GPM		4.0 GPM			
		Inches	CFM	(in. H2O)	NC	qTOTAL	ΔCOIL	qTOTAL	ΔCOIL	qTOTAL	ΔCOIL	qTOTAL	ΔCOIL		ft.
3	M17	4	8	0.21	15	560	0.70	609	2.90	621	6.60	627	1.50	6.0	1 - 2 - 8
			11	0.39	15	733		837		858		869			2 - 4 - 12
			14	0.63	20	889		1023		1057		1073			3 - 6 - 16
			17	0.93	26	1090		1244		1293		1317			4 - 9 - 18
	M23	4	15	0.20	15	965		1102		1131		1146		4.5	2 - 4 - 13
			20	0.36	15	1217		1403		1452		1475			4 - 8 - 17
			25	0.56	19	1584		1792		1868		1906			6 - 11 - 19
			30	0.81	25	1860		2131		2237		2292			8 - 13 - 21
	M31	4	30	0.23	15	1324		1522		1571		1594		2.7	4 - 8 - 17
			40	0.40	17	1791		2033		2117		2159			6 - 12 - 20
			50	0.63	24	2207		2529		2655		2720			10 - 15 - 22
			60	0.91	29	2492		2916		3085		3173			12 - 17 - 24
4	M17	4	11	0.20	15	741	1.00	819	3.80	840	8.60	851	1.90	6.0	1 - 2 - 10
			15	0.38	15	954		1113		1150		1169			2 - 5 - 15
			19	0.61	21	1176		1349		1405		1434			3 - 7 - 19
			23	0.89	27	1403		1611		1691		1732			5 - 11 - 21
	M23	4	21	0.21	15	1287		1500		1552		1579		4.5	2 - 6 - 16
			28	0.37	15	1665		1894		1981		2024			4 - 10 - 20
			35	0.58	21	2060		2401		2535		2604			7 - 13 - 23
			42	0.84	27	2379		2838		3024		3121			10 - 16 - 25
	M31	4	35	0.18	15	1528		1780		1842		1873		2.7	3 - 7 - 18
			50	0.36	15	2109		2414		2532		2592			6 - 13 - 22
			65	0.59	18	2671		3156		3350		3450			11 - 17 - 25
			80	0.90	25	3070		3730		4004		4147			14 - 20 - 28
5	M17	4	15	0.23	15	960	1.20	1093	4.70	1131	1.30	1150	2.40	6.0	1 - 3 - 13
			20	0.41	16	1205		1440		1502		1533			3 - 6 - 17
			25	0.65	23	1455		1713		1805		1852			4 - 9 - 22
			30	0.93	28	1709		2029		2157		2223			6 - 13 - 24
	M23	4	25	0.18	15	1252		1487		1548		1579		4.5	2 - 6 - 17
			35	0.36	15	1661		1950		2059		2115			5 - 11 - 23
			45	0.59	23	2082		2512		2686		2777			8 - 15 - 26
			55	0.87	24	2349		2996		3243		3374			12 - 19 - 28
	M31	6" oval	40	0.14	15	1413		1666		1732		1766		2.7	3 - 6 - 18
			60	0.32	15	1984		2325		2457		2525			6 - 14 - 24
			80	0.57	15	2549		3115		3343		3462			11 - 18 - 28
			100	0.89	21	2850		3700		4027		4226			15 - 22 - 31
6	M17	4	20	0.28	15	1204	1.40	1423	5.50	1486	1.60	1518	2.80	6.0	2 - 4 - 16
			25	0.44	18	1429		1744		1837		1884			3 - 7 - 20
			30	0.63	23	1654		2001		2127		2193			4 - 10 - 24
			35	0.86	28	1879		2281		2446		2531			6 - 13 - 26
	M23	4	35	0.25	15	1921		2338		2469		2536		4.5	4 - 8 - 22
			45	0.41	17	2356		2843		3040		3143			6 - 14 - 26
			55	0.61	23	2797		3485		3774		3926			9 - 17 - 28
			65	0.83	23	3071		4019		4402		4607			13 - 20 - 31
	M31	6" oval	60	0.22	15	2331		2834		2997		3080		2.7	5 - 11 - 24
			80	0.40	15	2953		3602		3869		4008			9 - 17 - 28
			100	0.62	15	3511		4471		4870		5081			13 - 21 - 31
			120	0.90	21	3814		5132		5664		5971			17 - 24 - 34

Note: Reference page U76 for operational conditions used for performance notes

CBAB / 4-PIPE HEATING

Nominal Length ft	Nozzle Size	Primary Air			Sound	Coil heating (Btu/h)								Induction ratio	Throw
		Inlet Dia.	Flow Rate	Inlet ΔPS		1.0 GPM		2.0 GPM		3.0 GPM		4.0 GPM			
		Inches	CFM	(in. H2O)	NC	qTOTAL	ΔCOIL	qTOTAL	ΔCOIL	qTOTAL	ΔCOIL	qTOTAL	ΔCOIL		ft.
3	M17	4	8	0.21	15	1245	0.12	1354	0.49	1381	1.10	1394	1.95	6.0	1 - 2 - 8
			11	0.39	15	1629		1860		1908		1932			2 - 4 - 12
			14	0.63	20	1975		2273		2348		2384			3 - 6 - 16
			17	0.93	26	2423		2764		2873		2926			4 - 9 - 18
	M23	4	15	0.20	15	2144		2450		2514		2547		4.5	2 - 4 - 13
			20	0.36	15	2704		3117		3226		3278			4 - 8 - 17
			25	0.56	19	3519		3981		4151		4236			6 - 11 - 19
			30	0.81	25	4133		4737		4972		5093			8 - 13 - 21
	M31	4	30	0.23	15	2943		3383		3490		3543		2.7	4 - 8 - 17
			40	0.40	17	3980		4517		4704		4797			6 - 12 - 20
			50	0.63	24	4904		5621		5900		6044			10 - 15 - 22
			60	0.91	29	5538		6479		6856		7052			12 - 17 - 24
4	M17	4	11	0.20	15	1648	0.16	1820	0.63	1868	1.41	1891	2.51	6.0	1 - 2 - 10
			15	0.38	15	2121		2474		2556		2597			2 - 5 - 15
			19	0.61	21	2614		2997		3123		3187			3 - 7 - 19
			23	0.89	27	3119		3580		3759		3850			5 - 11 - 21
	M23	4	21	0.21	15	2861		3333		3449		3508		4.5	2 - 6 - 16
			28	0.37	15	3700		4210		4401		4498			4 - 10 - 20
			35	0.58	21	4577		5335		5634		5787			7 - 13 - 23
			42	0.84	27	5286		6307		6720		6935			10 - 16 - 25
	M31	4	35	0.18	15	3395		3955		4093		4163		2.7	3 - 7 - 18
			50	0.36	15	4686		5365		5627		5760			6 - 13 - 22
			65	0.59	18	5936		7014		7445		7668			11 - 17 - 25
			80	0.90	25	6822		8290		8897		9216			14 - 20 - 28
5	M17	4	15	0.23	15	2134	0.19	2430	0.78	2514	1.75	2556	3.11	6.0	1 - 3 - 13
			20	0.41	16	2679		3199		3337		3407			3 - 6 - 17
			25	0.65	23	3234		3807		4011		4115			4 - 9 - 22
			30	0.93	28	3797		4509		4793		4940			6 - 13 - 24
	M23	4	25	0.18	15	2783		3306		3440		3509		4.5	2 - 6 - 17
			35	0.36	15	3692		4334		4575		4699			5 - 11 - 23
			45	0.59	23	4626		5581		5969		6171			8 - 15 - 26
			55	0.87	24	5220		6659		7208		7497			12 - 19 - 28
	M31	4	40	0.14	15	3139		3702		3849		3924		2.7	3 - 6 - 18
			60	0.32	15	4409		5167		5461		5612			6 - 14 - 24
			80	0.57	15	5664		6922		7428		7693			11 - 18 - 28
			100	0.89	21	6334		8222		8949		9391			15 - 22 - 31
6	M17	4	20	0.28	15	2676	0.23	3162	0.92	3303	2.06	3374	3.67	6.0	2 - 4 - 16
			25	0.44	18	3176		3875		4081		4186			3 - 7 - 20
			30	0.63	23	3675		4447		4727		4872			4 - 10 - 24
			35	0.86	28	4175		5070		5435		5625			6 - 13 - 26
	M23	4	35	0.25	15	4268		5196		5486		5635		4.5	4 - 8 - 22
			45	0.41	17	5236		6318		6756		6984			6 - 14 - 26
			55	0.61	23	6215		7745		8388		8725			9 - 17 - 28
			65	0.83	23	6825		8930		9783		10238			13 - 20 - 31
	M31	4	60	0.22	15	5180		6297		6659		6845		2.7	5 - 11 - 24
			80	0.40	15	6562		8005		8598		8907			9 - 17 - 28
			100	0.62	15	7802		9937		10823		11291			13 - 21 - 31
			120	0.90	21	8476		11405		12586		13269			17 - 24 - 34

Note: Reference page U76 for operational conditions used for performance notes

CBAB / 2-PIPE COOLING

Nominal Length ft	Nozzle Size	Primary Air			Sound	Coil Sensible Cooling (Btu/h)								Induction ratio	Throw
		Inlet Dia.	Flow Rate	Inlet ΔPS		1.0 GPM		2.0 GPM		3.0 GPM		4.0 GPM			
		Inches	CFM	(in. H2O)	NC	qTOTAL	ΔCOIL	qTOTAL	ΔCOIL	qTOTAL	ΔCOIL	qTOTAL	ΔCOIL		ft.
3	M17	4	8	0.21	15	598	0.90	650	3.70	663	8.30	669	1.90	6.0	1 - 2 - 8
			11	0.39	15	782		893		916		927			2 - 4 - 12
			14	0.63	20	948		1091		1127		1144			3 - 6 - 16
			17	0.93	26	1163		1327		1379		1405			4 - 9 - 18
	M23	4	15	0.20	15	1029		1176		1207		1222		4.5	2 - 4 - 13
			20	0.36	15	1298		1496		1548		1574			4 - 8 - 17
			25	0.56	19	1689		1911		1992		2033			6 - 11 - 19
			30	0.81	25	1984		2274		2386		2445			8 - 13 - 21
	M31	4	30	0.23	15	1413		1624		1675		1701		2.7	4 - 8 - 17
			40	0.40	17	1910		2168		2258		2303			6 - 12 - 20
			50	0.63	24	2354		2698		2832		2901			10 - 15 - 22
			60	0.91	29	2658		3110		3291		3385			12 - 17 - 24
4	M17	4	11	0.20	15	791	1.20	874	4.80	896	1.40	907	2.40	6.0	1 - 2 - 10
			15	0.38	15	1018		1187		1227		1247			2 - 5 - 15
			19	0.61	21	1255		1439		1499		1530			3 - 7 - 19
			23	0.89	27	1497		1718		1804		1848			5 - 11 - 21
	M23	4	21	0.21	15	1373		1600		1656		1684		4.5	2 - 6 - 16
			28	0.37	15	1776		2021		2113		2159			4 - 10 - 20
			35	0.58	21	2197		2561		2704		2778			7 - 13 - 23
			42	0.84	27	2538		3027		3226		3329			10 - 16 - 25
	M31	4	35	0.18	15	1629		1899		1965		1998		2.7	3 - 7 - 18
			50	0.36	15	2249		2575		2701		2765			6 - 13 - 22
			65	0.59	18	2849		3367		3573		3680			11 - 17 - 25
			80	0.90	25	3275		3979		4270		4424			14 - 20 - 28
5	M17	4	15	0.23	15	1025	1.50	1166	5.80	1206	1.70	1227	3.00	6.0	1 - 3 - 13
			20	0.41	16	1286		1536		1602		1635			3 - 6 - 17
			25	0.65	23	1552		1827		1925		1975			4 - 9 - 22
			30	0.93	28	1823		2164		2301		2371			6 - 13 - 24
	M23	4	25	0.18	15	1336		1587		1651		1684		4.5	2 - 6 - 17
			35	0.36	15	1772		2080		2196		2256			5 - 11 - 23
			45	0.59	23	2220		2679		2865		2962			8 - 15 - 26
			55	0.87	24	2506		3196		3460		3599			12 - 19 - 28
	M31	6" oval	40	0.14	15	1507		1777		1847		1883		2.7	3 - 6 - 18
			60	0.32	15	2116		2480		2621		2694			6 - 14 - 24
			80	0.57	15	2719		3322		3566		3693			11 - 18 - 28
			100	0.89	21	3040		3946		4296		4508			15 - 22 - 31
6	M17	4	20	0.28	15	1285	1.70	1518	6.90	1585	2.00	1620	3.50	6.0	2 - 4 - 16
			25	0.44	18	1525		1860		1959		2009			3 - 7 - 20
			30	0.63	23	1764		2134		2269		2339			4 - 10 - 24
			35	0.86	28	2004		2433		2609		2700			6 - 13 - 26
	M23	4	35	0.25	15	2049		2494		2633		2705		4.5	4 - 8 - 22
			45	0.41	17	2513		3033		3243		3352			6 - 14 - 26
			55	0.61	23	2983		3718		4026		4188			9 - 17 - 28
			65	0.83	23	3276		4286		4696		4914			13 - 20 - 31
	M31	6" oval	60	0.22	15	2486		3023		3196		3285		2.7	5 - 11 - 24
			80	0.40	15	3150		3842		4127		4275			9 - 17 - 28
			100	0.62	15	3745		4770		5195		5420			13 - 21 - 31
			120	0.90	21	4069		5475		6041		6369			17 - 24 - 34

Note: Reference page U76 for operational conditions used for performance notes

CBAB / 2-PIPE HEATING

Nominal Length ft	Nozzle Size	Primary Air			Sound	Coil heating (Btu/h)								Induction ratio	Throw
		Inlet Dia.	Flow Rate	Inlet ΔPS		1.0 GPM		2.0 GPM		3.0 GPM		4.0 GPM			
		Inches	CFM	(in. H2O)	NC	qTOTAL	ΔCOIL	qTOTAL	ΔCOIL	qTOTAL	ΔCOIL	qTOTAL	ΔCOIL		ft.
3	M17	4	8	0.21	15	1660	0.92	1805	3.69	1841	8.30	1859	1.88	6.0	1 - 2 - 8
			11	0.39	15	2172		2480		2544		2576			2 - 4 - 12
			14	0.63	20	2634		3031		3131		3179			3 - 6 - 16
			17	0.93	26	3230		3685		3830		3902			4 - 9 - 18
	M23	4	15	0.20	15	2859		3267		3352		3396		4.5	2 - 4 - 13
			20	0.36	15	3605		4157		4301		4371			4 - 8 - 17
			25	0.56	19	4692		5309		5534		5648			6 - 11 - 19
			30	0.81	25	5510		6315		6629		6791			8 - 13 - 21
	M31	4	30	0.23	15	3924		4510		4654		4724		2.7	4 - 8 - 17
			40	0.40	17	5306		6023		6272		6396			6 - 12 - 20
			50	0.63	24	6539		7494		7866		8059			10 - 15 - 22
			60	0.91	29	7384		8639		9142		9403			12 - 17 - 24
4	M17	4	11	0.20	15	2197	1.19	2427	4.76	2490	1.37	2521	2.43	6.0	1 - 2 - 10
			15	0.38	15	2827		3298		3408		3463			2 - 5 - 15
			19	0.61	21	3485		3996		4164		4249			3 - 7 - 19
			23	0.89	27	4158		4774		5012		5133			5 - 11 - 21
	M23	4	21	0.21	15	3814		4444		4599		4678		4.5	2 - 6 - 16
			28	0.37	15	4933		5613		5868		5998			4 - 10 - 20
			35	0.58	21	6103		7114		7512		7716			7 - 13 - 23
			42	0.84	27	7049		8409		8960		9247			10 - 16 - 25
	M31	4	35	0.18	15	4526		5274		5458		5551		2.7	3 - 7 - 18
			50	0.36	15	6248		7153		7502		7680			6 - 13 - 22
			65	0.59	18	7915		9352		9926		10224			11 - 17 - 25
			80	0.90	25	9096		11053		11862		12288			14 - 20 - 28
5	M17	4	15	0.23	15	2846	1.46	3240	5.83	3351	1.67	3408	2.97	6.0	1 - 3 - 13
			20	0.41	16	3572		4266		4449		4543			3 - 6 - 17
			25	0.65	23	4311		5076		5348		5487			4 - 9 - 22
			30	0.93	28	5063		6012		6390		6586			6 - 13 - 24
	M23	4	25	0.18	15	3710		4407		4587		4679		4.5	2 - 6 - 17
			35	0.36	15	4923		5779		6101		6266			5 - 11 - 23
			45	0.59	23	6168		7442		7959		8228			8 - 15 - 26
			55	0.87	24	6960		8878		9610		9996			12 - 19 - 28
	M31	4	40	0.14	15	4185		4936		5132		5232		2.7	3 - 6 - 18
			60	0.32	15	5878		6890		7281		7482			6 - 14 - 24
			80	0.57	15	7552		9229		9904		10257			11 - 18 - 28
			100	0.89	21	8446		10962		11932		12522			15 - 22 - 31
6	M17	4	20	0.28	15	3568	1.72	4215	6.89	4404	1.98	4499	3.52	6.0	2 - 4 - 16
			25	0.44	18	4235		5167		5442		5581			3 - 7 - 20
			30	0.63	23	4900		5929		6303		6496			4 - 10 - 24
			35	0.86	28	5567		6760		7247		7500			6 - 13 - 26
	M23	4	35	0.25	15	5691		6928		7315		7513		4.5	4 - 8 - 22
			45	0.41	17	6981		8424		9008		9312			6 - 14 - 26
			55	0.61	23	8286		10326		11184		11633			9 - 17 - 28
			65	0.83	23	9100		11907		13044		13650			13 - 20 - 31
	M31	4	60	0.22	15	6906		8396		8879		9126		2.7	5 - 11 - 24
			80	0.40	15	8749		10674		11464		11876			9 - 17 - 28
			100	0.62	15	10403		13249		14431		15055			13 - 21 - 31
			120	0.90	21	11302		15207		16781		17692			17 - 24 - 34

Note: Reference page U76 for operational conditions used for performance notes

NOTES:

1. All performance data based on test performed in accordance with ASHRAE Standard 200-2018.
2. ΔP_s values are measured in inches of water.
3. NC values are based on room absorption of 10 dB. A dash (-) indicates an NC value less than 15.
4. Throw values are based on isothermal supply air and represent throw distances to terminal velocities of 150, 100 and 50 fpm respectively
5. ΔP_{Coil} values are measured in feet of water. ΔP_{Coil} values in shaded cells indicate use of a two circuit coil. All other values represent a single circuit coil.
6. Induction ratio is multiplied by the volume flow rate of primary air to estimate the volume flow rate of room air entrained through the coil.

Cooling performance:

- Cooling capacity listed (qTOTAL) is the total sensible heat removal by the beam's integral coil. It does not include any contribution or offset by the primary air.

- Capacity is based on 18°F ΔT between the induced air and the chilled water supply. Table 1 provides correction factors for other temperature differentials.

- Primary air sensible cooling contribution can be calculated by the following equation:

$$q_{SENSPA} = 1.085 \times CFM_{PA} \times (T_{ROOM} - T_{PA})$$

- Primary air latent cooling can be calculated by the following equation:

$$q_{LATENT} = 0.69 \times CFM_{PA} \times (W_{ROOM} - W_{PA})$$

where W_{ROOM} and W_{PA} are the humidity ratio of the room and primary air respectively expressed in Grains of moisture per pound dry air

TABLE 4: CORRECTION FOR (ΔT) BETWEEN ENTERING AIR AND ENTERING CHILLED WATER

Actual ΔT	10	12	14	16	**18**	20	22	24
Multiply Table Value by:	0.56	0.67	0.78	0.89	**1.00**	1.11	1.22	1.33

Heating performance:

- Heating capacity listed (qTOTAL) is the sensible heat removal by the beam's integral coil. It does not include any contribution or offset by the primary air

- Capacity is based on 50°F ΔT between the induced air and the chilled water supply. Table 2 provides correction factors for other temperature differentials.

- Primary air sensible heating offset (or contribution) can be calculated by the following equation:

$$q_{SENSPA} = 1.085 \times CFM_{PA} \times (T_{PA} - T_{ROOM})$$

if the primary air temperature is lower than that of the room, it will offset the coil's heating

if the primary air temperature is higher than that of the room, it will contribute to the coil's heating

TABLE 2: CORRECTION FOR (ΔT) BETWEEN ENTERING AIR AND ENTERING CHILLED WATER

Actual ΔT	20	30	40	**50**	60	70	80	90	100	110	120
Multiply Table Value by:	0.40	0.60	0.80	**1.00**	1.20	1.40	1.60	1.80	2.00	2.20	2.40

Legend:

ΔP_S = Unit Inlet Pressure [in wg]

qCoil = Sensible Capacity, Coil [Btu/h]

ΔCoil = Water coil pressure drop [ft wg]

q_{SENSPA} = Sensible Capacity, Primary Air [Btu/h]

CFM_{PA} = Air Flowrate, Primary Air [CFM]

T_{PA} = Temperature Primary Air [°F]

T_{ROOM} = Temperature Room Air [°F]

q_{SENSPA} = Latent Capacity, Primary Air [Btu/h]

Sidewall Active Chilled Beams

CBAW

- Provides comfortable, effective sensible cooling to the space
- Optimized nozzle design provides high capacity and low noise levels
- Ideal for multi-story residential and hospitality spaces
- Quick and simple installation
- Available in nominal lengths up to 10 feet

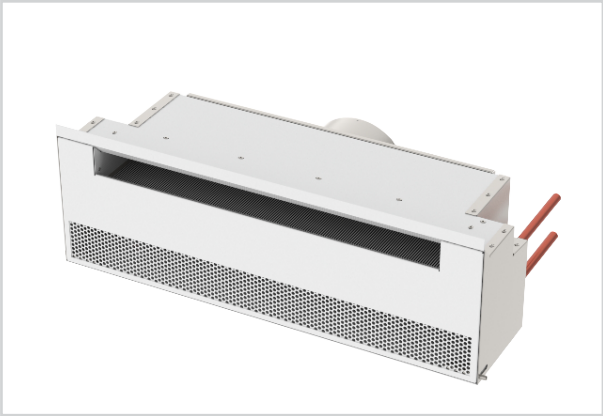

CBAW

hotels / motels | dual-function | universities | energy solutions

See website for Specifications

MODEL:

CBAW / Sidewall Active Chilled Beam

OVERVIEW

Titus active chilled beams benefit from the use of using hydronic coils and induced air to reduce energy consumption associated with removal of sensible thermal loads. The primary air is supplied to the chilled beam subsequent to it being discharged through a series of nozzles located along the length of the beam. The nozzles inject the primary air into the mixing chamber at velocities capable of inducing plenum or soffit air through the water coil and where it mixes with the primary supply air. This mixture of air is then discharged into the space through ceiling slot diffusers. This provides high cooling outputs with low amounts of primary air. The reduced volume of air results in the reduction of the air handler capacity and size, smaller duct sizes, and the overall energy consumption.

The supplied air from the air handling unit is tempered and dehumidified to handle the latent load. The remaining loads in the space are addressed with the heat exchanger which is incorporated into the chilled beam. Applications with low latent cooling loads could use 100 percent outdoor air allowing for use of a dedicated outdoor air system with energy recovery further reducing total system energy consumption.

In multi-story residential and hospitality spaces, the CBAW sidewall beams complement modern architectural styling and minimize installed space, as well as minimizing energy consumption. Superior comfort and near maintenance free operation of the CBAW product family, combined with energy efficiency are an ideal solution in such demanding applications.

ADVANTAGES

- Removal of high thermal loads is possible in this air/water system
- The height of the air duct system is reduced to a minimum, due to the low supply of primary air
- Substantial reduction in the operating costs, due to low primary air volume
- Improvement of the thermal comfort inside the room
- Contributing sound levels below NC-30

CBAW STANDARD FEATURES

- 2 foot to 10 foot lengths, 1 foot increments
- 2-pipe and 4-pipe coil configurations
- Configured nozzle geometry for capacity optimization
- Commissioning port with roomside access for balancing
- ½" Sweat water coil connections
- Coil air vent
- Perforated grille

OPTIONS AND ACCESSORIES

- Linear bar grille
- ½" thick foil-faced EcoShield, anti-microbial external insulation
- Coil drain valve
- ½" or ¾ MNPT water coil connections
- 12-inch, 18-inch or 24-inch stainless steel braided hoses
- Coil lint screen
- Constant volume regulator

CBAW UNIT DIMENSIONS

Nominal Length	A	C
2ft	24	26⅛
3ft	36	38⅛
4ft	48	50⅛
5ft	60	62⅛
6ft	72	74⅛
7ft	84	86⅛
8ft	96	98⅛
9ft	108	110⅛
10ft	120	122⅛

Nominal Inlet	B
4 IN	3⅞
5 IN	4⅞
6 IN	5¼
8 IN	5¼

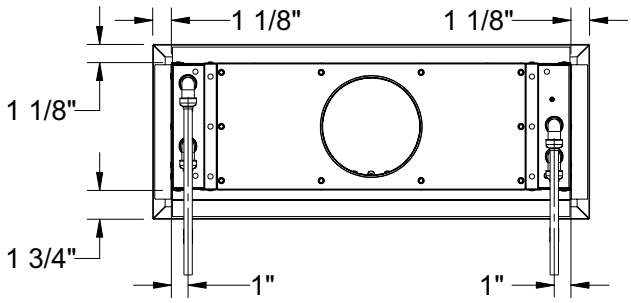

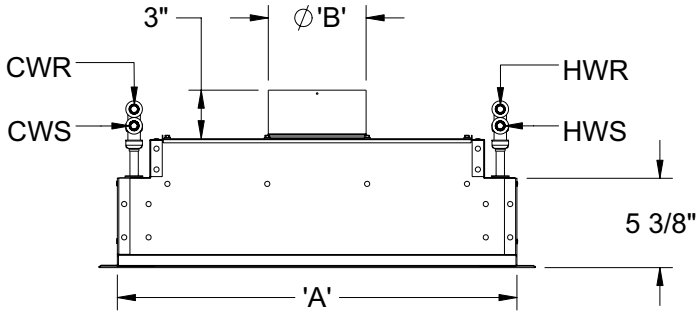

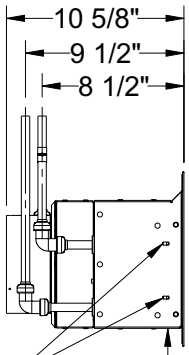

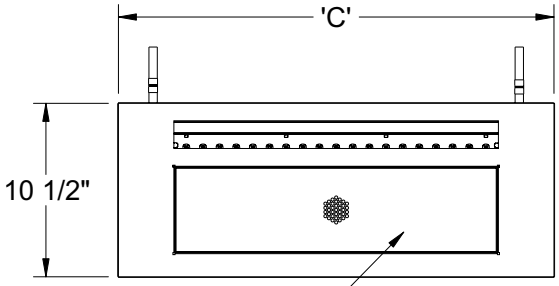

MOUNTING SLOTS

RETURN GRILLE
(PERFORATED OR LINEAR BAR)

All dimensions are in inches

CBAW / 4-PIPE COOLING

Nominal Length ft	Nozzle Size	Primary Air			Sound	Coil Sensible Cooling (Btu/h)								Induction ratio	Throw
		Inlet Dia.	Flow Rate	Inlet ΔPS		1.0 GPM		2.0 GPM		3.0 GPM		4.0 GPM			
		Inches	CFM	(in. H2O)	NC	qTOTAL	ΔCOIL	qTOTAL	ΔCOIL	qTOTAL	ΔCOIL	qTOTAL	ΔCOIL		ft.
3	M17	4	8	0.27	15	405	0.30	425	1.10	432	2.50	435	4.00	4.4	1 - 2 - 6
			10	0.42	19	484		513		524		528			1 - 2 - 8
			12	0.61	23	556		597		611		617			2 - 4 - 9
			14	0.83	27	623		675		694		702			2 - 5 - 11
	M23	4	14	0.23	16	579		619		633		639		3.6	2 - 5 - 11
			18	0.38	22	696		757		779		788			4 - 7 - 12
			22	0.57	27	800		882		914		927			5 - 8 - 13
			26	0.80	31	892		997		1038		1056			7 - 10 - 15
	M31	4	24	0.18	19	770		842		870		882		3.0	6 - 9 - 14
			32	0.32	26	930		1043		1087		1105			8 - 12 - 16
			40	0.51	31	1066		1219		1281		1307			10 - 13 - 18
			48	0.71	25	1181		1375		1455		1490			12 - 14 - 20
4	M17	4	10	0.20	15	502	0.40	531	1.40	541	3.20	545	5.10	4.4	1 - 2 - 6
			13	0.35	20	619		663		680		687			1 - 3 - 9
			16	0.52	24	723		786		810		820			2 - 4 - 11
			19	0.74	28	818		901		933		945			3 - 6 - 13
	M23	4	18	0.19	17	734		793		815		824		3.6	2 - 5 - 12
			24	0.33	24	901		995		1031		1045			4 - 8 - 14
			30	0.52	29	1046		1178		1229		1250			6 - 10 - 16
			36	0.74	33	1171		1341		1410		1438			8 - 12 - 17
	M31	4	35	0.21	23	1054		1184		1234		1255		3.0	8 - 12 - 17
			45	0.35	29	1232		1417		1492		1523			10 - 14 - 19
			55	0.52	34	1381		1623		1723		1766			12 - 15 - 21
			65	0.69	27	1508		1806		1933		1987			13 - 16 - 23
5	M17	4	12	0.17	15	596	0.40	634	1.70	648	3.90	654	6.30	4.4	1 - 2 - 7
			16	0.31	20	747		809		833		842			1 - 3 - 10
			20	0.48	26	880		970		1004		1018			2 - 5 - 12
			24	0.69	30	998		1118		1164		1183			3 - 7 - 14
	M23	4	24	0.20	20	936		1030		1066		1080		3.6	3 - 7 - 14
			30	0.31	25	1091		1224		1276		1297			5 - 9 - 16
			36	0.44	29	1226		1401		1471		1499			7 - 11 - 17
			42	0.60	33	1346		1564		1652		1688			8 - 13 - 19
	M31	6" oval	40	0.16	15	1200		1360		1424		1449		3.0	8 - 12 - 18
			55	0.31	19	1454		1706		1809		1852			11 - 15 - 21
			70	0.50	25	1655		1999		2145		2207			14 - 17 - 24
			85	0.74	30	1819		2253		2442		2525			15 - 19 - 27
6	M17	4	15	0.18	16	726	0.50	783	2.00	804	4.60	812	7.40	4.4	1 - 2 - 8
			20	0.32	23	904		995		1029		1043			2 - 4 - 11
			25	0.50	28	1058		1188		1238		1258			2 - 5 - 14
			30	0.71	32	1193		1364		1431		1459			4 - 8 - 16
	M23	4	28	0.18	20	1074		1196		1242		1261		3.6	3 - 7 - 15
			36	0.29	26	1270		1449		1520		1548			5 - 10 - 17
			44	0.44	31	1436		1676		1772		1812			8 - 12 - 19
			52	0.61	35	1580		1881		2005		2058			9 - 14 - 21
	M31	6" oval	50	0.17	15	1429		1657		1748		1785		3.0	9 - 14 - 20
			70	0.34	22	1725		2085		2235		2299			13 - 17 - 24
			90	0.56	28	1950		2439		2653		2745			16 - 19 - 27
			110	0.84	32	2128		2739		3016		3138			17 - 21 - 30

Note: Reference page U91 for operational conditions used for performance notes

CBAW / 4-PIPE HEATING

Nominal Length ft	Nozzle Size	Primary Air			Sound	Coil Heating (Btu/h)								Induction ratio	Throw
		Inlet Dia.	Flow Rate	Inlet ΔPS		1.0 GPM		2.0 GPM		3.0 GPM		4.0 GPM			
		Inches	CFM	(in. H2O)	NC	qTOTAL	ΔCOIL	qTOTAL	ΔCOIL	qTOTAL	ΔCOIL	qTOTAL	ΔCOIL		ft.
3	M17	4	8	0.27	15	938	0.09	984	0.36	1001	0.82	1007	1.31	4.4	1 - 2 - 6
			10	0.42	19	1121		1189		1214		1223			1 - 2 - 8
			12	0.61	23	1288		1381		1416		1428			2 - 4 - 9
			14	0.83	27	1443		1563		1607		1625			2 - 5 - 11
	M23	4	14	0.23	16	1340		1432		1466		1479		3.6	2 - 5 - 11
			18	0.38	22	1612		1751		1804		1825			4 - 7 - 12
			22	0.57	27	1852		2042		2116		2146			5 - 8 - 13
			26	0.80	31	2064		2308		2404		2444			7 - 10 - 15
	M31	4	24	0.18	19	1782		1950		2015		2041		3.0	6 - 9 - 14
			32	0.32	26	2154		2414		2516		2559			8 - 12 - 16
			40	0.51	31	2468		2822		2965		3025			10 - 13 - 18
			48	0.71	25	2734		3183		3369		3448			12 - 14 - 20
4	M17	4	10	0.20	15	1163	0.12	1228	0.47	1252	1.06	1262	1.70	4.4	1 - 2 - 6
			13	0.35	20	1432		1536		1574		1589			1 - 3 - 9
			16	0.52	24	1674		1820		1875		1897			2 - 4 - 11
			19	0.74	28	1893		2086		2159		2188			3 - 6 - 13
	M23	4	18	0.19	17	1698		1835		1887		1907		3.6	2 - 5 - 12
			24	0.33	24	2085		2303		2386		2420			4 - 8 - 14
			30	0.52	29	2421		2726		2844		2893			6 - 10 - 16
			36	0.74	33	2710		3105		3264		3329			8 - 12 - 17
	M31	4	35	0.21	23	2440		2740		2856		2905		3.0	8 - 12 - 17
			45	0.35	29	2851		3281		3454		3526			10 - 14 - 19
			55	0.52	34	3196		3756		3989		4087			12 - 15 - 21
			65	0.69	27	3490		4181		4475		4601			13 - 16 - 23
5	M17	4	12	0.17	15	1380	0.14	1468	0.58	1501	1.29	1513	2.08	4.4	1 - 2 - 7
			16	0.31	20	1729		1874		1928		1949			1 - 3 - 10
			20	0.48	26	2038		2246		2325		2356			2 - 5 - 12
			24	0.69	30	2311		2588		2696		2738			3 - 7 - 14
	M23	4	24	0.20	20	2167		2385		2467		2499		3.6	3 - 7 - 14
			30	0.31	25	2525		2833		2954		3002			5 - 9 - 16
			36	0.44	29	2839		3243		3404		3470			7 - 11 - 17
			42	0.60	33	3117		3620		3823		3908			8 - 13 - 19
	M31	6" oval	40	0.16	15	2778		3149		3296		3355		3.0	8 - 12 - 18
			55	0.31	19	3367		3949		4186		4287			11 - 15 - 21
			70	0.50	25	3832		4628		4966		5109			14 - 17 - 24
			85	0.74	30	4212		5216		5654		5844			15 - 19 - 27
6	M17	4	15	0.18	16	1682	0.17	1813	0.69	1861	1.54	1880	2.47	4.4	1 - 2 - 8
			20	0.32	23	2092		2304		2383		2415			2 - 4 - 11
			25	0.50	28	2449		2750		2865		2912			2 - 5 - 14
			30	0.71	32	2761		3157		3313		3377			4 - 8 - 16
	M23	4	28	0.18	20	2486		2769		2875		2919		3.6	3 - 7 - 15
			36	0.29	26	2940		3355		3518		3584			5 - 10 - 17
			44	0.44	31	3325		3879		4103		4195			8 - 12 - 19
			52	0.61	35	3657		4355		4642		4763			9 - 14 - 21
	M31	6" oval	50	0.17	15	3308		3835		4046		4132		3.0	9 - 14 - 20
			70	0.34	22	3993		4825		5174		5322			13 - 17 - 24
			90	0.56	28	4515		5647		6142		6355			16 - 19 - 27
			110	0.84	32	4925		6340		6982		7265			17 - 21 - 30

Note: Reference page U91 for operational conditions used for performance notes

CBAW / 2-PIPE COOLING

Nominal Length ft	Nozzle Size	Primary Air			Sound	Coil Sensible Cooling (Btu/h)								Induction ratio	Throw
		Inlet Dia.	Flow Rate	Inlet ΔPS		1.0 GPM		2.0 GPM		3.0 GPM		4.0 GPM			
		Inches	CFM	(in. H2O)	NC	qTOTAL	ΔCOIL	qTOTAL	ΔCOIL	qTOTAL	ΔCOIL	qTOTAL	ΔCOIL		ft.
3	M17	4	8	0.27	15	432	0.40	454	1.50	461	3.30	464	5.40	4.4	1 - 2 - 6
			10	0.42	19	516		548		559		564			1 - 2 - 8
			12	0.61	23	593		637		652		658			2 - 4 - 9
			14	0.83	27	665		720		741		749			2 - 5 - 11
	M23	4	14	0.23	16	617		660		676		682		3.6	2 - 5 - 11
			18	0.38	22	743		807		831		841			4 - 7 - 12
			22	0.57	27	853		941		975		989			5 - 8 - 13
			26	0.80	31	951		1064		1108		1126			7 - 10 - 15
	M31	4	24	0.18	19	821		899		928		941		3.0	6 - 9 - 14
			32	0.32	26	992		1112		1159		1179			8 - 12 - 16
			40	0.51	31	1137		1300		1366		1394			10 - 13 - 18
			48	0.71	25	1260		1467		1552		1589			12 - 14 - 20
4	M17	4	10	0.20	15	536	0.50	566	1.90	577	4.30	581	7.00	4.4	1 - 2 - 6
			13	0.35	20	660		708		725		732			1 - 3 - 9
			16	0.52	24	771		839		864		874			2 - 4 - 11
			19	0.74	28	872		961		995		1008			3 - 6 - 13
	M23	4	18	0.19	17	783		846		869		879		3.6	2 - 5 - 12
			24	0.33	24	961		1061		1099		1115			4 - 8 - 14
			30	0.52	29	1115		1256		1311		1333			6 - 10 - 16
			36	0.74	33	1249		1431		1504		1534			8 - 12 - 17
	M31	4	35	0.21	23	1124		1263		1316		1338		3.0	8 - 12 - 17
			45	0.35	29	1314		1512		1591		1625			10 - 14 - 19
			55	0.52	34	1473		1731		1838		1883			12 - 15 - 21
			65	0.69	27	1608		1927		2062		2120			13 - 16 - 23
5	M17	4	12	0.17	15	636	0.60	676	2.40	692	5.30	697	8.50	4.4	1 - 2 - 7
			16	0.31	20	797		863		889		898			1 - 3 - 10
			20	0.48	26	939		1035		1071		1086			2 - 5 - 12
			24	0.69	30	1065		1192		1242		1262			3 - 7 - 14
	M23	4	24	0.20	20	999		1099		1137		1152		3.6	3 - 7 - 14
			30	0.31	25	1163		1306		1361		1383			5 - 9 - 16
			36	0.44	29	1308		1495		1569		1599			7 - 11 - 17
			42	0.60	33	1436		1668		1762		1801			8 - 13 - 19
	M31	6" oval	40	0.16	15	1280		1451		1519		1546		3.0	8 - 12 - 18
			55	0.31	19	1551		1820		1929		1975			11 - 15 - 21
			70	0.50	25	1766		2133		2288		2354			14 - 17 - 24
			85	0.74	30	1941		2404		2605		2693			15 - 19 - 27
6	M17	4	15	0.18	16	775	0.70	835	2.80	858	6.30	866	10.00	4.4	1 - 2 - 8
			20	0.32	23	964		1062		1098		1113			2 - 4 - 11
			25	0.50	28	1128		1267		1320		1342			2 - 5 - 14
			30	0.71	32	1272		1455		1527		1556			4 - 8 - 16
	M23	4	28	0.18	20	1146		1276		1325		1345		3.6	3 - 7 - 15
			36	0.29	26	1355		1546		1621		1652			5 - 10 - 17
			44	0.44	31	1532		1788		1891		1933			8 - 12 - 19
			52	0.61	35	1685		2007		2139		2195			9 - 14 - 21
	M31	6" oval	50	0.17	15	1524		1767		1864		1904		3.0	9 - 14 - 20
			70	0.34	22	1840		2223		2384		2452			13 - 17 - 24
			90	0.56	28	2080		2602		2830		2928			16 - 19 - 27
			110	0.84	32	2269		2922		3217		3348			17 - 21 - 30

Note: Reference page U91 for operational conditions used for performance notes

CBAW / 2-PIPE HEATING

Nominal Length ft	Nozzle Size	Primary Air			Sound	Coil Heating (Btu/h)								Induction ratio	Throw
		Inlet Dia.	Flow Rate	Inlet ΔPS		1.0 GPM		2.0 GPM		3.0 GPM		4.0 GPM			
		Inches	CFM	(in. H2O)	NC	qTOTAL	ΔCOIL	qTOTAL	ΔCOIL	qTOTAL	ΔCOIL	qTOTAL	ΔCOIL		ft.
3	M17	4	8	0.27	15	1201	0.37	1260	1.49	1281	3.35	1289	5.37	4.4	1 - 2 - 6
			10	0.42	19	1435		1521		1553		1566			1 - 2 - 8
			12	0.61	23	1648		1768		1812		1828			2 - 4 - 9
			14	0.83	27	1846		2000		2057		2079			2 - 5 - 11
	M23	4	14	0.23	16	1715		1833		1877		1893		3.6	2 - 5 - 11
			18	0.38	22	2063		2242		2309		2336			4 - 7 - 12
			22	0.57	27	2371		2614		2708		2746			5 - 8 - 13
			26	0.80	31	2642		2955		3077		3128			7 - 10 - 15
	M31	4	24	0.18	19	2280		2496		2579		2613		3.0	6 - 9 - 14
			32	0.32	26	2757		3090		3220		3275			8 - 12 - 16
			40	0.51	31	3159		3612		3795		3872			10 - 13 - 18
			48	0.71	25	3499		4074		4312		4414			12 - 14 - 20
4	M17	4	10	0.20	15	1489	0.48	1572	1.93	1603	4.34	1615	6.96	4.4	1 - 2 - 6
			13	0.35	20	1833		1966		2015		2034			1 - 3 - 9
			16	0.52	24	2143		2330		2401		2429			2 - 4 - 11
			19	0.74	28	2424		2670		2763		2800			3 - 6 - 13
	M23	4	18	0.19	17	2174		2349		2415		2441		3.6	2 - 5 - 12
			24	0.33	24	2669		2948		3054		3097			4 - 8 - 14
			30	0.52	29	3099		3489		3641		3703			6 - 10 - 16
			36	0.74	33	3469		3975		4178		4261			8 - 12 - 17
	M31	4	35	0.21	23	3123		3507		3656		3718		3.0	8 - 12 - 17
			45	0.35	29	3650		4199		4421		4513			10 - 14 - 19
			55	0.52	34	4091		4808		5106		5232			12 - 15 - 21
			65	0.69	27	4467		5352		5728		5889			13 - 16 - 23
5	M17	4	12	0.17	15	1766	0.59	1879	2.37	1921	5.33	1937	8.54	4.4	1 - 2 - 7
			16	0.31	20	2213		2398		2468		2495			1 - 3 - 10
			20	0.48	26	2608		2875		2975		3016			2 - 5 - 12
			24	0.69	30	2958		3312		3450		3505			3 - 7 - 14
	M23	4	24	0.20	20	2774		3053		3157		3199		3.6	3 - 7 - 14
			30	0.31	25	3232		3627		3781		3843			5 - 9 - 16
			36	0.44	29	3633		4152		4357		4442			7 - 11 - 17
			42	0.60	33	3990		4634		4893		5003			8 - 13 - 19
	M31	6" oval	40	0.16	15	3556		4031		4219		4295		3.0	8 - 12 - 18
			55	0.31	19	4309		5054		5359		5487			11 - 15 - 21
			70	0.50	25	4905		5924		6356		6540			14 - 17 - 24
			85	0.74	30	5391		6677		7237		7481			15 - 19 - 27
6	M17	4	15	0.18	16	2152	0.69	2320	2.78	2383	6.25	2407	10.03	4.4	1 - 2 - 8
			20	0.32	23	2678		2949		3050		3091			2 - 4 - 11
			25	0.50	28	3134		3519		3667		3727			2 - 5 - 14
			30	0.71	32	3534		4041		4241		4322			4 - 8 - 16
	M23	4	28	0.18	20	3182		3544		3680		3736		3.6	3 - 7 - 15
			36	0.29	26	3763		4294		4503		4588			5 - 10 - 17
			44	0.44	31	4255		4966		5252		5370			8 - 12 - 19
			52	0.61	35	4680		5574		5942		6096			9 - 14 - 21
	M31	6" oval	50	0.17	15	4234		4909		5179		5289		3.0	9 - 14 - 20
			70	0.34	22	5112		6176		6623		6812			13 - 17 - 24
			90	0.56	28	5779		7228		7861		8134			16 - 19 - 27
			110	0.84	32	6304		8116		8937		9299			17 - 21 - 30

Note: Reference page U91 for operational conditions used for performance notes

NOTES:

1. All performance data based on test performed in accordance with ASHRAE Standard 200-2018.
2. ΔP_s values are measured in inches of water.
3. NC values are based on room absorption of 10 dB. A dash (-) indicates an NC value less than 15.
4. Throw values are based on isothermal supply air and represent throw distances to terminal velocities of 150, 100 and 50 fpm respectively
5. ΔP_{Coil} values are measured in feet of water. ΔP_{Coil} values in shaded cells indicate use of a two circuit coil. All other values represent a single circuit coil.
6. Induction ratio is multiplied by the volume flow rate of primary air to estimate the volume flow rate of room air entrained through the coil.

Cooling performance:

- Cooling capacity listed (qTOTAL) is the total sensible heat removal by the beam's integral coil. It does not include any contribution or offset by the primary air.

- Capacity is based on 18°F ΔT between the induced air and the chilled water supply. Table 1 provides correction factors for other temperature differentials.

- Primary air sensible cooling contribution can be calculated by the following equation:

$$q_{SENSPA} = 1.085 \times CFM_{PA} \times (T_{ROOM} - T_{PA})$$

- Primary air latent cooling can be calculated by the following equation:

$$q_{LATENT} = 0.69 \times CFM_{PA} \times (W_{ROOM} - W_{PA})$$

where W_{ROOM} and W_{PA} are the humidity ratio of the room and primary air respectively expressed in Grains of moisture per pound dry air

TABLE 4: CORRECTION FOR (ΔT) BETWEEN ENTERING AIR AND ENTERING CHILLED WATER

Actual ΔT	10	12	14	16	**18**	20	22	24
Multiply Table Value by:	0.56	0.67	0.78	0.89	**1.00**	1.11	1.22	1.33

Heating performance:

- Heating capacity listed (qTOTAL) is the sensible heat removal by the beam's integral coil. It does not include any contribution or offset by the primary air

- Capacity is based on 50°F ΔT between the induced air and the chilled water supply. Table 2 provides correction factors for other temperature differentials.

- Primary air sensible heating offset (or contribution) can be calculated by the following equation:

$$q_{SENSPA} = 1.085 \times CFM_{PA} \times (T_{PA} - T_{ROOM})$$

if the primary air temperature is lower than that of the room, it will offset the coil's heating

if the primary air temperature is higher than that of the room, it will contribute to the coil's heating

TABLE 2: CORRECTION FOR (ΔT) BETWEEN ENTERING AIR AND ENTERING CHILLED WATER

Actual ΔT	20	30	40	**50**	60	70	80	90	100	110	120
Multiply Table Value by:	0.40	0.60	0.80	**1.00**	1.20	1.40	1.60	1.80	2.00	2.20	2.40

Legend:

ΔP_S = Unit Inlet Pressure [in wg]

qCoil = Sensible Capacity, Coil [Btu/h]

ΔCoil = Water coil pressure drop [ft wg]

q_{SENSPA} = Sensible Capacity, Primary Air [Btu/h]

CFM_{PA} = Air Flowrate, Primary Air [CFM]

T_{PA} = Temperature Primary Air [°F]

T_{ROOM} = Temperature Room Air [°F]

q_{SENSPA} = Latent Capacity, Primary Air [Btu/h]

Linear Passive Chilled Beams

CBPE / CBPR

- Provides comfortable, effective sensible cooling to the space
- Ultra quiet, natural convection driven operation
- Perforated or Linear Bar Grille options for exposed models
- Exposed, recessed or concealed installation
- Quick and simple installation
- Available in nominal lengths up to 10 feet
- ½" Sweat or ½" MNPT coil connections

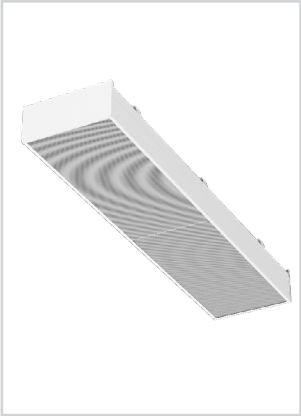

CBPE

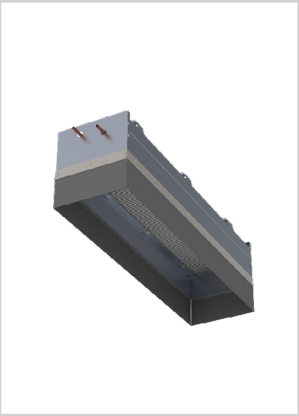

CBPR

k-12 education | universities | energy solutions

See website for Specifications

MODELS:

CBPE / Exposed linear passive chilled beam
CBPR / Recessed linear passive chilled beam

FINISHES:

Standard Finish - #26 White
Optional Finish - #84 Black

OVERVIEW

Comfortable, effective, ultra-quiet sensible cooling technology

Passive chilled beams are primarily used to provide sensible cooling in perimeter zones and comfortable sensible cooling within interior zones. The primary mode of heat transfer is by natural convection, with a percentage of heat transfer transmitted through radiation. During cooling, warm room air rises to the ceiling area; cool air around the coil sinks down to the occupied area as a result of the higher density. As the cool air descends in to the space, more warm air is drawn over the coil creating a convective current that drives the system.

The airflow pattern generated from a passive beam is unidirectional with direct downward projection from the bottom of the beam. As the thermal buoyancy of the cool air drives the airflow down into space it will begin to mix with ambient room air and diffuse throughout the space. To maximize occupant comfort with passive beam systems, stationary or seated occupants should not be positioned directly under a beam. Passive beams should be installed in aisles, walkways or corridors, or at least 15 feet above the occupied space to prevent instances of occupant discomfort.

When using passive chilled beams, ventilation and latent cooling loads are addressed by a separate primary air system. Primary air systems could be traditional mixed air distribution, underfloor air distribution or displacement ventilation systems. As the primary air system is not used to address the entire cooling load the total system fan energy is reduced improving overall energy efficiency of the building. Applications with low latent cooling loads could use 100 percent outdoor air allowing for use of a dedicated outdoor air system with energy recovery further reducing total system energy consumption.

CBPE

The CBPE is ideal for exposed installations or can be integrated into lay-in ceiling systems for concealed installations. For applications with low ceilings or limited ceiling plenum height the low profile design excels at satisfying sensible cooling.

CBPR

CBPR passive beams are designed for recessed installation above a false ceiling. The false ceiling could be an architectural cloud type or even a perforated panel in a conventional lay-in ceiling grid. The CBPR beams are supplied with an additional skirt below the unit's coil that is designed to further enhance the convective current through beam augmenting performance. Beams should be installed with the skirt in contact with the top side of the false ceiling.

Redefine your comfort zone. ™ | www.titus-hvac.com

CBPE UNIT DIMENSIONS

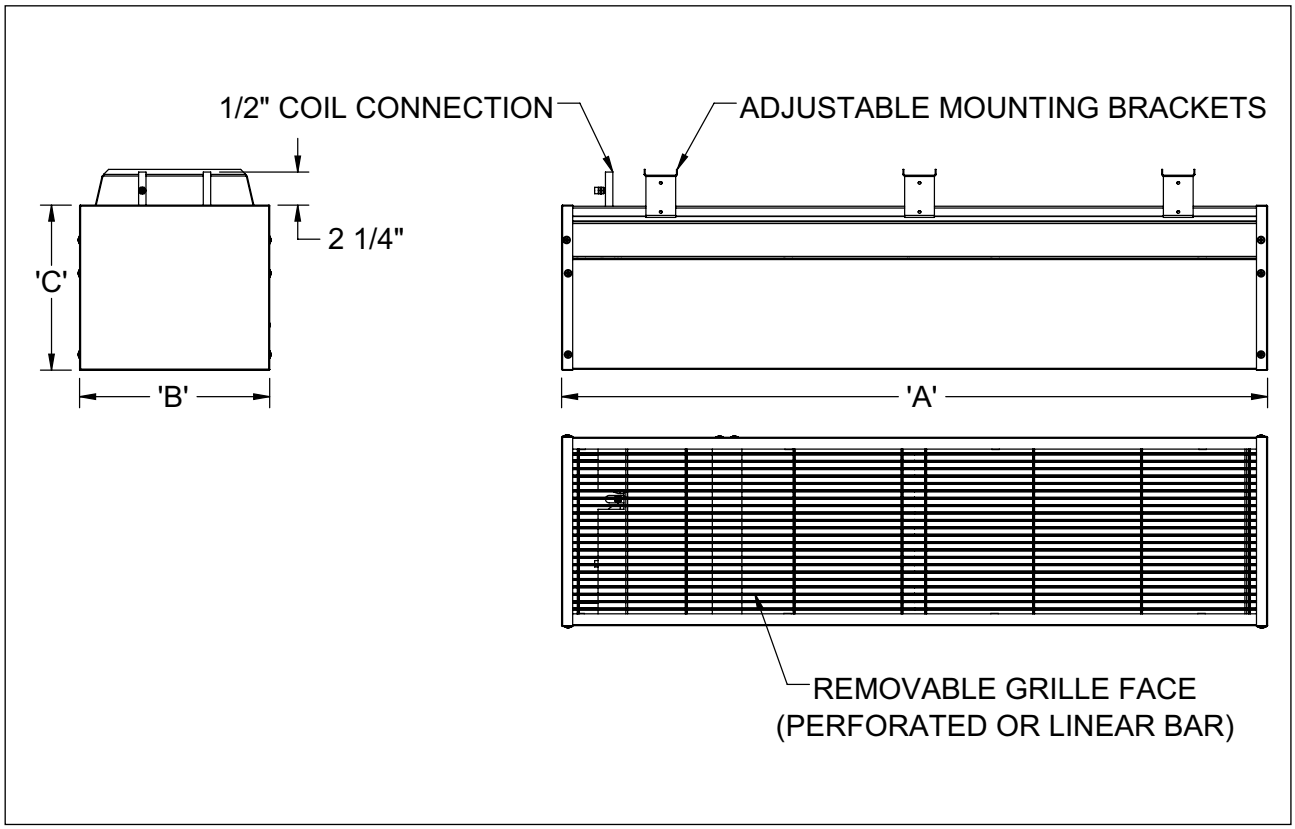

Nominal Unit Length (ft)	'A' (IN)
2	23¾
3	35¾
4	47¾
5	59¾
6	71¾
7	83¾
8	95¾
9	107¾
10	119¾

Nominal Unit Width (IN)	'B' (IN)
13	12¾
17	16¾
18	17¾
22	21¾
24	23¾

Nominal Unit Height (IN)	'C' (IN)
8	8⁷/₈
10	10⁷/₈
12	12⁷/₈

All dimensions are in inches

CBPE / CBPR SENSIBLE COOLING CAPACITY

Nominal Length ft	Nominal Width in	Chilled Water Flow Rate, GPM											
		0.75 GPM		1.0 GPM		1.25 GPM		1.5 GPM		2.0 GPM		2.5 GPM	
		Q_{SENS} Btu/h	ΔP_W ft wg	Q_{SENS} Btu/h	ΔP_W ft wg	Q_{SENS} Btu/h	ΔP_W ft wg	Q_{SENS} Btu/h	ΔP_W ft wg	Q_{SENS} Btu/h	ΔP_W ft wg	Q_{SENS} Btu/h	ΔP_W ft wg
4	13	963	0.33	1,000	0.75	1,029	1.17	1,054	1.62	1,094	2.69	1,127	4.01
	17	1,045	0.40	1,085	0.90	1,117	1.41	1,144	1.94	1,188	3.23	1,223	4.81
	18	1,121	0.46	1,164	1.06	1,198	1.64	1,227	2.26	1,274	3.77	1,312	5.61
	22	1,190	0.53	1,236	1.21	1,272	1.88	1,303	2.59	1,353	4.31	1,393	6.41
	24	1,255	0.60	1,303	1.36	1,342	2.11	1,374	2.91	1,427	4.84	1,469	7.21
6	13	1,444	0.45	1,499	1.05	1,544	1.63	1,581	2.24	1,642	3.70	1,690	5.48
	17	1,568	0.54	1,628	1.26	1,676	1.95	1,717	2.68	1,782	4.44	1,835	6.58
	18	1,681	0.63	1,745	1.46	1,797	2.28	1,840	3.13	1,911	5.18	1,967	7.67
	22	1,785	0.72	1,854	1.67	1,909	2.60	1,955	3.58	2,029	5.92	2,089	8.77
	24	1,883	0.81	1,955	1.88	2,013	2.93	2,061	4.02	2,140	6.66	2,204	9.86
8	13	1,925	0.57	1,999	1.34	2,058	2.08	2,108	2.85	2,189	4.71	2,254	6.95
	17	2,091	0.68	2,171	1.61	2,235	2.50	2,289	3.42	2,376	5.65	2,447	8.35
	18	2,241	0.79	2,327	1.87	2,396	2.91	2,454	4.00	2,548	6.59	2,623	9.74
	22	2,380	0.91	2,472	2.14	2,545	3.33	2,606	4.57	2,706	7.53	2,786	11.13
	24	2,510	1.02	2,606	2.41	2,684	3.75	2,748	5.14	2,854	8.47	2,938	12.52
10	13	2,407	0.68	2,499	1.63	2,573	2.54	2,635	3.47	2,736	5.71	2,817	8.43
	17	2,613	0.82	2,713	1.96	2,794	3.04	2,861	4.17	2,971	6.86	3,059	10.11
	18	2,801	0.96	2,909	2.28	2,995	3.55	3,067	4.86	3,185	8.00	3,279	11.80
	22	2,975	1.09	3,089	2.61	3,181	4.06	3,258	5.56	3,382	9.14	3,482	13.49
	24	3,138	1.23	3,258	2.94	3,354	4.56	3,435	6.25	3,567	10.28	3,673	15.17

Performance based on:

1. Unit height of 10 inches. Correction factors for other unit heights are shown in table 1 below.
2. Distance (Y) between top of beam and horizontal surface equal to 30% of coil width (W). For other values of Y/W see table 2 below.
3. Discharge through a minimum 50% free area face. Correction factors for other free areas are shown in table 3 below.
4. Free area for room air to enter ceiling cavity equal to free area of beam discharge into space.
5. Based on an 18°F ΔT between entering air and entering chilled water. Correction factors for other ΔT values are shown in table 4 below.

Legend:

Q_{SENS} - Sensible Capacity, Coil [Btu/h]

ΔP_w - Water coil pressure drop [ft wg]

TABLE 1: CORRECTION FOR UNIT HEIGHT

Unit height	Multiply Table Value by:
8	0.95
10	1.00
12	1.05

TABLE 2: CORRECTION FOR DISTANCE BELOW STRUCTURE VERSUS UNIT WIDTH (Y/W)

Y/W	Multiply Table Value by:
0.10	0.66
0.20	0.92
0.30	1.00
0.40	1.03
0.50	1.04

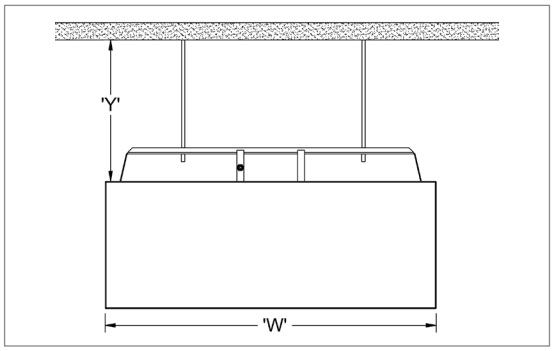

TABLE 3: CORRECTION FOR FALSE CEILING FREE AREA

Face free area	Multiply Table Value by:
30%	0.94
40%	0.98
50% or more	1.00

TABLE 4: CORRECTION FOR (ΔT) BETWEEN ENTERING AIR* AND ENTERING CHILLED WATER

Actual ΔT	10	12	14	16	18	20	22	24
Multiply Table Value by:	0.56	0.67	0.78	0.89	1.00	1.11	1.22	1.33

*Note: Entering air temperature is typically 2-3°F above room temperature for exposed and standard recessed installations. When beams are installed above a adjacent to the perimeter glazing, entering air temperature is typically 5 to 7°F above that of the room.

Notes

Titus
Redefine your comfort zone.™

Icons

contributes toward energy savings by reducing operating costs of air distribution devices

energy solutions

finish options that resemble wood grains, perfect for high-profile architectural applications

wood grains

ideally suited for occupant spaces on university and college campuses

universities

excellent air distribution device for schools and other educational facilities

k-12 education

for use in retrofitting older products into modern designs & systems

retrofit

excellent air distribution device for hotels, motels or any similar commercial building application

hotels / motels

can be used in open ceiling environments

open ceiling

supplies both heating and cooling from one air device

dual-function

can be used in healthcare facility common areas such as: nurse's stations, patient rooms and waiting rooms

healthcare